Wireless Optical Communications

TS5000 / XXX

(TS1000/G/YUW/VS, TS155/G/YUW/VS,
TS10/G/ETH/VS, TS8/G/4X1/VS)

Installation Manual

WIRELESS OPTICAL COMMUNICATIONS

Installation Manual

Document Number 4705000, Rev. 2.0

July 2006

© MRV Communications, Inc.
Web site: www. mrv.com

Table of Contents

STANDARDS

Standards Compliance i
FCC Notice i
CE Mark i
Other Standards ii
MRV™ Laser Safety Certification ii

About this Installation Manual iii

SAFETY REQUIREMENTS

Before Installing iv
Before Powering On iv
When Installing iv
Servicing v

Introduction vi

CHAPTER 1 - THE PRODUCT

Models 1
General Description 2
Front 2
Back 3
A. TS5000/G Standard Model (w/o Fusion and with one power supply 4
B. TS5000/G-F (Standard Model including Fusion Option) 8
C. TS5000/155 (w/o Fusion and with one power supply) 9
D. TS5000/155-F (Standard Model including Fusion option) 13
E. TS5000/ETH (Ethernet System) 16
F. TS5000/4X1 (4E1 or 4T1 System) 18
Loop and Remote Loope Operation Mode 20
Monitoring & Management Options 21
Management 21
Dry contact 21
RSM 21
Typical Connection 22

CHAPTER 2 - SITE SURVEY

Line of Sight 23
Orientation 23
Location & Range 23
Mounting Environment & Stability 26
Transmitting through a Window 28

CHAPTER 3 - INFRASTRUCTURE
Power 29
Data/Signal Cabling 29

CHAPTER 4 - BENCH TEST
TS5000/G & TS5000/G-F 31
TS5000/155 & TS5000/155-F 32
TS5000/ETH 33
TS5000/4X1 33
Test configurations 34
Display and Results 36

CHAPTER 5 - INSTALLATION
Accessories 39
Mounting 42
Accessories 42
Attachment of the Transceiver 42
Particular Figure Cases/Techniques 44

CHAPTER 6 - AIMING PROCEDURE
Powering on the TereScope 45
Transceiver Alignment 46
Coarse Alignment 46
Fine Alignment 46
Link Operating Test 47
Installation Log 48
Installation Completion 50

CHAPTER 8 - MAINTENANCE
Periodic Visits 52

APPENDIX A. Product specifications

APPENDIX B. Digital Readout vs. Distance

APPENDIX C. Unpacking Instructions

APPENDIX D. Tool Kit, Equipment and Materials

APPENDIX E. TereScope Bench Test Procedure

APPENDIX F. Effect of wind on TereScope Devices

APPENDIX G. FSO Chaining

APPENDIX H. Installation Log

Standards

Standards Compliance

UL 1950; CSA 22.2 No 950; FCC Part 15 Class A; CE-89/336/EEC, 73/23/EEC

FCC Notice

WARNING: This equipment has been tested and found to comply with the limits for a Class A digital device, pursuant to Part 15 of the FCC Rules. These limits are designed to provide reasonable protection against harmful interference when the equipment is operated in a commercial environment. This equipment generates, uses, and can radiate radio frequency energy and, if not installed and used in accordance with the instruction manual, may cause harmful interference to radio communications. Operation of this equipment in a residential area is likely to cause harmful interference in which case the user will be required to correct the interference at his own expense.
The user is cautioned that changes and modifications made to the equipment without approval of the manufacturer could void the user's authority to operate this equipment
It is suggested that the user use only shielded and grounded cables when appropriate to ensure compliance with FCC Rules.

CE Mark

The CE mark symbolizes compliance with the EMC directive of the European Community. Such marking is indicative that the specified equipment meets or exceeds the following technical standards:

- EN 55022 - Limits and Methods of Measurement of Radio Interference Characteristics of Information Technology Equipment
- EN 50081-1- Electromagnetic compatibility - of Radio Interference Characteristics of Information Technology Equipment Generic Emission standard Part 1 – Residential commercial and light industry environment
- EN 50082-1 - Electromagnetic compatibility -- Generic immunity standard Part 1: Residential, commercial and light industry environment
- EN61000-4-2 (previously IEC 1000-4-2) - Electromagnetic compatibility for industrial-process measurement and control equipment Part 4: Section 2 - Electrostatic discharge requirements
- EN61000-4-3 (previously IEC 1000-4-3) - Electromagnetic compatibility for industrial-process measurement and control equipment Part 4: Section 3 - Radiated electromagnetic field requirements
- EN61000-4-4 (previously IEC 1000-4-4) - Electromagnetic compatibility for industrial-process measurement and control equipment Part 4: Section 4 - Electrical fast transient/burst requirements
- EN61000-4-5 - Electromagnetic compatibility for industrial-process measurement and control equipment
  Part 4: Section 5 – Surge Immunity requirements
- EN61000-4-6 - Electromagnetic compatibility for industrial-process measurement and control equipment
  Part 4: Section 6 – Immunity to conducted disturbances induces by radio frequency fields
- EN61000-4-8- Electromagnetic compatibility for industrial-process measurement and control equipment
  Part 4: Section 8– Power frequency magnetic field immunity requirements
- EN61000-4-11 – Electromagnetic compatibility for industrial-process measurement and control equipment Part 4: Section 11 – Voltage dips short interruptions and voltage variations immunity requirements
- EN61000-3-2 – Harmonic standard
- EN61000-3-3 – Voltage Fluctuation and Flicker standard
- CISPR 22 - Radiated and Line-conducted Class A
- EN 60950 - ITE Safety

Other Standards

1. CISPR 22: 1993
AS/NZS 3548: 1995, Class A,
Joint Amendment No. 1: 1997, Joint Amendment No. 2: 1997

2. EN 60950+A1+A2+A3+A4+A11
ACA TS001-1997
AS/NZS 3260: 1993 A4: 1997

ITU G.703, G.704, G.706,G.736, G.737, G.738, G739, G740, G.775, G.823.

MRV ™ Laser Safety Certification

The TereScope is designed, built, and tested to be eyesafe, even if the output beams are viewed directly, provided that no magnifying optics are used.
This product is Class 1M according to the American National Standard for Safe Use of Lasers ANSI Z136.1-1993 provided that there is not a reasonable probability of accidental viewing with optics in the direct path of the beam where the TereScope is installed.
This product is Class 1M according to the International Standard of the International Electrotechnical Commision IEC 60825-1, Amendment 2, January 2001 entitled "Safety of laser products." The following explanatory label is applicable to these products:

LASER RADIATION
DO NOT VIEW DIRECTLY WITH OPTICAL INSTRUMENTS
(BINOCULARS OR TELESCOPES)
CLASS 1M LASER PRODUCT

This product complies with United States FDA performance standards for laser products except for deviations pursuant to Laser Notice No. 50 as published in June 2001, which allows for the use of the IEC 60825-1 classification standard. Under this standard, these products are Class 1M.
A 'Declaration of Conformity', in accordance with the above standards, has been made and is on file at MRV.

Disclaimer

MRV reserves the right to modify the equipment at any time and in any way it sees fit in order to improve it.

MRV provides this document without any warranty of any kind either expressed or implied, including, but not limited to, the implied warranties of merchantability or fitness for a particular purpose.

Although much care has been taken in the preparation of this document, omissions and errors may still exist. Therefore, the customer is advised to exercise due discretion in the use of the contents of this document since the customer bears sole responsibility.

Trademarks

All trademarks are the property of their respective holders.

Copyright © 2001 by MRV

All rights reserved. No part of this document may be reproduced without the prior permission of MRV.

This document and the information contained herein are proprietary to MRV and are furnished to the recipient solely for use in operating, maintaining and repairing MRV equipment. The information within may not be utilized for any purpose except as stated herein, and may not be disclosed to third parties without written permission from MRV. MRV reserves the right to make changes to any technical specifications in order to improve reliability, function or design.

About this Installation Manual

Audience

This manual is intended for the user who wishes to install, operate, manage and troubleshoot TereScope5000.

Qualifications

Users of this guide are expected to have working knowledge of:

- Electro-optical equipment
- LAN equipment (Layer 2 and 3)
- License to install equipment on buildings/elevated structures
- License to work with power line (mains) voltages 110/230 Vac

Training

Installers are required to do a training course on MRV TereScopes that includes:

- IR links (site survey, installation equipment, alignment, etc.)
- Indoors and outdoors installation
- On-the-job-training
- Proficiency tests

Experience

Installers are required to have experience in coax cable TV home pass installation, PTT home pass installation, LAN installation, IR equipment installation, and home electrical wiring.

Authorization

When all the requirements specified above (namely, Qualifications, Training, and Experience) have been met, the installer must receive authorization from MRV certifying eligibility.

Safety Requirements

All requirements stipulated in the safety laws of the country of installation must be abided by when installing the TereScopes.

⚠	**Caution!** In addition, ensure that the requirements noted in this chapter are met in order to reduce risk of electrical shock and fire and to maintain proper installation.

Before Installing

Power: Ensure that *all* power to the TereScope is cut off. Specifically, disconnect all TereScope power cords from the power line (mains).
Inspection: Ensure by inspection that no part is damaged.

Before Powering On

Line Power: Ensure that the power from the line (mains) is as specified on the TereScope.

Power Cord: The power cord of The TereScope must have the following specifications:
Flexible 3-conductor power cord approved by the cognizant safety organization of the country. The power cord must be Type HAR (harmonized), with individual conductor wire having cross-sectional area 0.75 sq. mm. min. The power cord terminations should be a suitably rated earthling-type plug at one end and 3 terminal cord forks for M3 screws (1 for each wire) at the other end. Both of the power cord terminations must carry the certification label of the cognizant safety organization of the country.

Figure A: 3 terminal cord forks

When Installing

- Ensure, by visual inspection, that no part of the TereScope is damaged.
- Avoid eye contact with the laser beam at all times.
- Ensure that the system is installed in accordance with ANSI Z136.1 control measures (engineering, administrative, and procedural controls).
- Ensure that the system is installed in accordance with applicable building and installations codes.
- Install the TereScope in a restricted location as defined in this manual since it is a Class 1M FSOCS transmitter and receiver. A restricted location is a location where access to the transmission equipment and exposed beam is restricted and not accessible to the general public or

casual passerby. Examples of restricted locations are: sides of buildings at sufficient heights, restricted rooftops, and telephone poles. This definition of a restricted location is in accordance with the proposed IEC 60825-I Part 12 requirements.

- Avoid using controls, adjustments, or procedures other than those specified herein as they may result in hazardous radiation exposure.
- Avoid prolonged eye contact with the laser beam (maximum10 sec.).

Servicing

All servicing must be carried out only by qualified service personnel. Before servicing, ensure that all power to the TereScope is cut off!

Introduction

CAREFULLY READ THE ENTIRE MANUAL BEFORE INSTALLING

An InfraRed (IR) link allows connection without any cable between two distant sites. For that, two identical transceivers, each installed on one site and aligned one facing each other, provide a point-to-point connectivity. This configuration makes possible data transfer from one terminal to the other through the air over an optical wavelength carrier, the IR.

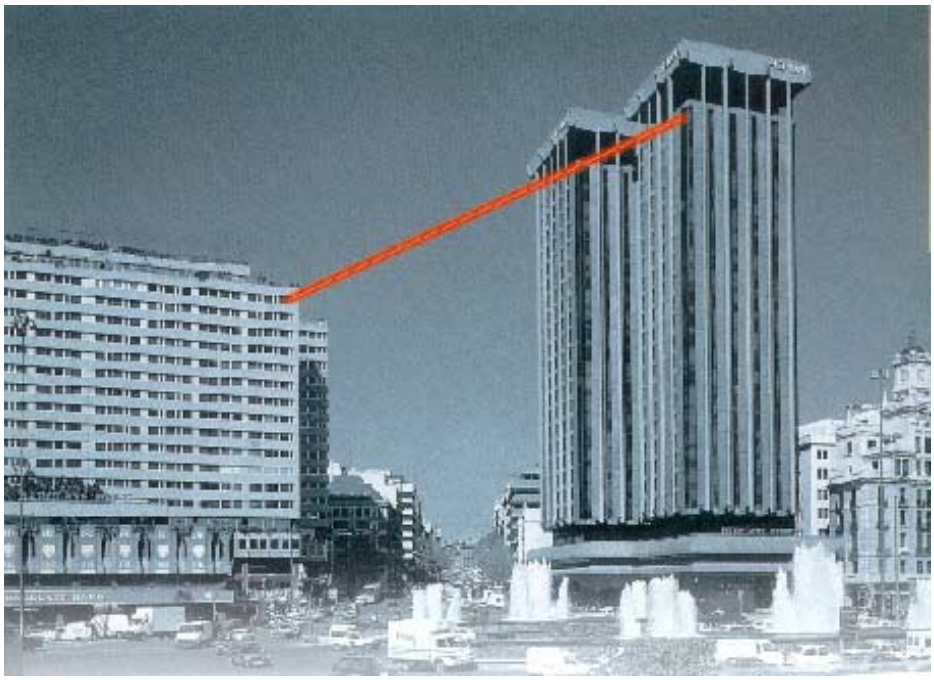

The installation of such a link can be summed up in 4 stages:

- Site survey
- Installation of the infrastructure
- Mounting of the equipment
- Aiming procedure

Always use appropriate safety equipment and procedures when working with electrical equipment and when working on roofs.

Chapter

1

The Product

Lift and hold the transceiver cautiously, taking care particularly not to damage the front Polycarbonate window.

Models

Table 1: Models of the TS5000[1]

Models	Part Number	Description
TS5000/G	TS1000/G/YUW/VS *Standard Model* *TS1000/G/M8C/VS*	TereScope5000/G for 20Mbps to 1.25Mbps connectivity up to 3000 m
TS5000/G-F	TS1000/G/YUW/FS *Standard Model* *TS1000/G/M8C/FS*	TereScope5000/G-F for 20Mbps to 1.25Mbps connectivity up to 3000 m. With Fusion option.
TS5000/155	TS155/G/YUW/VS *Standard Model* *TS155/G/M3C/VS*	TereScope5000 for 1-155 Mbps connectivity up to 5000 m
TS5000/155-F	TS155/G/YUW/FS *Standard Model* *TS155/G/M3C/FS*	TereScope5000-F for 1-155 Mbps, connectivity up to 5000m. With Fusion option
TS5000/ETH	TS10/G/ETH/VS	TereScope5000/ETH for 10 Mbps, Ethernet connectivity up to 6500 m
TS5000/4X1	TS8/G/4X1/VS	TereScope5000/4X1 for 4xE1 or 4xT1 connectivity up to 6500 m

Using the Part Number for Ordering

To place an order for a TS5000 model having a specific configuration, use the Part Number format shown in *Table 1*, noting the following:
‘155’ represents link operation speed in the range 1 to 155 Mbps.
‘8’ represents 4E1 or 4T1 operation speed.
‘10’ represents 10 Mbps (Ethernet) operation speed.
‘G’ represents TereScope 5000.
‘Y’ represents Optical Fiber Mode.

[1] TereScope 5000

Instead of Y use one of the following:
M (for MultiMode)
S (for SingleMode)

'U' represents operating wavelength.
Instead of U use one of the following:
8 (for 850 nm)
3 (for 1310 nm)
5 (for 1550 nm)

'W' represents connector type.
Instead of W use one of the following:
C (for SC)
T (for ST)

'V' represents yes or not with Fusion.
Instead of V use one of the following:
V designates no built-in Fusion option.
F designates built-in Fusion option.

'S' represents power supply type.
Instead of S use one of the following:
S (for input to the power supply in the range 100-240 VAC)
3 (for input to the power supply in the range 35-60 VDC)

'X' represents telephony protocol type.
Instead of X use one of the following:
E (for E1)
T (for T1)

Examples

1 - TS155/G/M3C/VS means TS5000/155:1-155Mbps link, Multimode 1310nm SC interface 100-240VAC

2 - TS155/G/S3T/F3: TS5000/155–F: 1-155Mbps link, Singlemode 1310nm ST interface 35-60VDC with Built-in Fusion option

General Description

1. Front

Each unit comprises a receiver, 3 transmitters and an interface on the rear panel for the connection to the peripheral equipment.

Front view
Showing the receiver side, the transmitters and the telescope

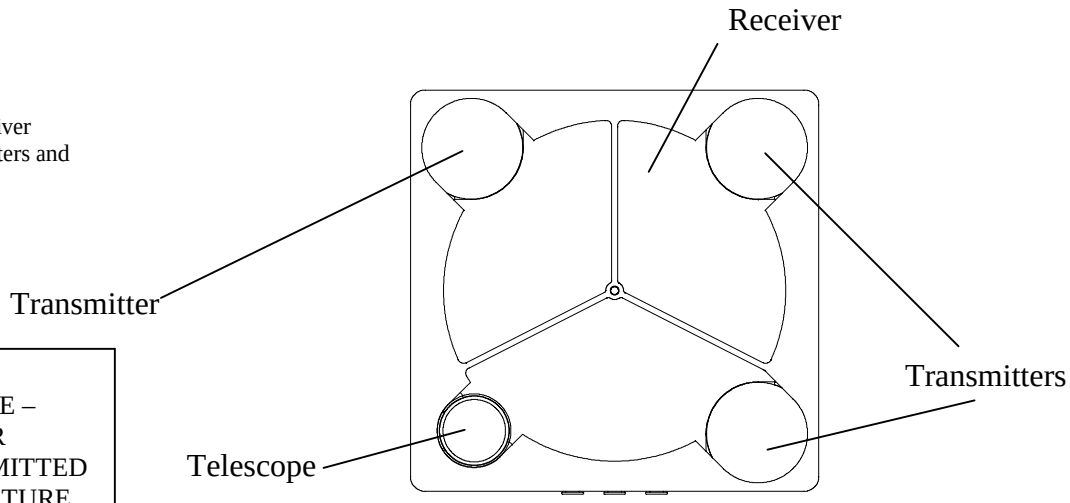

CAUTION!
AVOID EXPOSURE – INVISIBLE LASER RADIATION IS EMITTED FROM THIS APERTURE

Figure 1.1: Front View Schematic

2. Back

The TS5000 has a pluggable power supply. In the field, a failed power supply can be replaced within seconds without the need for performing any other changes to the TS5000. Appendix I gives the procedure for replacing the power supply.

All models of the TS5000 are SNMP manageable. SNMP monitoring can be performed using MRV's MegaVision SNMP management server application.

TS5000/G and TS5000/155

There have been several additional improvements to the TS5000/G and TS5000/155 models:

- An additional optional power supply, i.e. a standard model has one modular power supply and a redundant power supply can be ordered or even added in the field. (fig 1.2a)
- The interface of these models is modular as well. (Fig. 1.2b)
- A new SNMP Management card. See Appendix J: "TS5000 & TS4000 enhancements" for further info on the improvements to these models.

Figure 1.2a: Connecting the redundant Power supply

Figure 1.2b: Changing the Optical interface

A. TS5000/G Standard Model (w/o Fusion and with one power supply)

The TS5000/G can support various data rates and protocols within the 20Mbps - 1.5 Gbps range, for example Fast Ethernet, ATM, 622 Mbps, Fiber Channel, Gigabit Ethernet, etc. The TS5000/G has Clock Recovery for the entire operation range. There is no need to set the clock by means of DIP switches or other means. The TereScope automatically identifies and locks on to the clock frequency of the transferred data

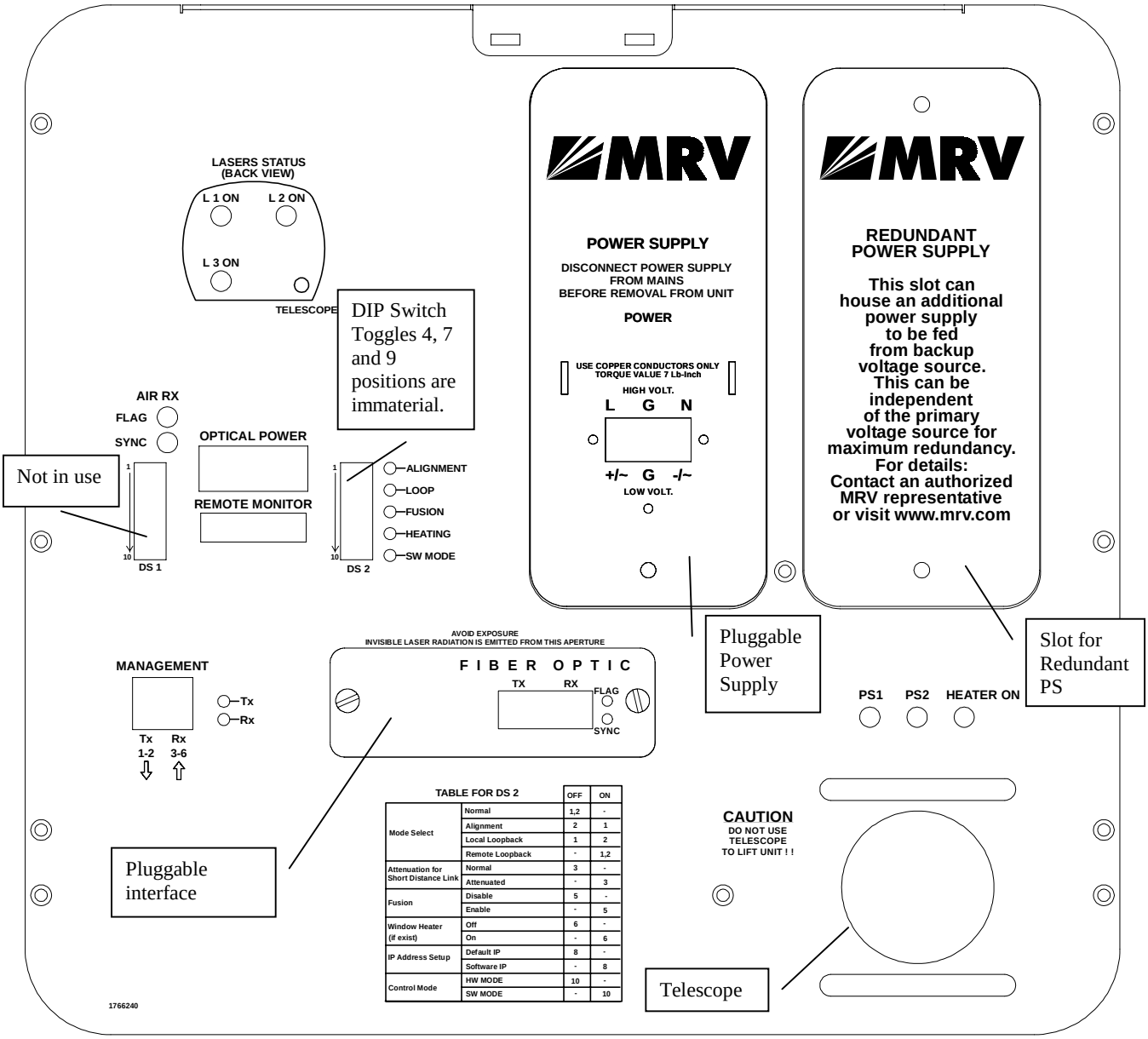

TABLE FOR DS 2

		OFF	ON
Mode Select	Normal	1,2	-
	Alignment	2	1
	Local Loopback	1	2
	Remote Loopback	-	1,2
Attenuation for Short Distance Link	Normal	3	-
	Attenuated	-	3
Fusion	Disable	5	-
	Enable	-	5
Window Heater (if exist)	Off	6	-
	On	-	6
IP Address Setup	Default IP	8	-
	Software IP	-	8
Control Mode	HW MODE	10	-
	SW MODE	-	10

Figure 1.3: TS5000/G Standard Model Panel Schematic

Back Panel Description

Table 2: TS5000/G Back Panel Controls, Interfaces, and Indicators

Connectors	Power	Power source Terminal Block (Main or UPS). AC power supply (100 to 240 Vac) or DC power supply (35 to 60 Vdc)
	Fiber optic	Fiber Optic interface for connection to the peripheral equipment. The standard interface is MM 850nm SC connector; other interfaces are available upon request (refer to price list or data sheet). In model TS5000/G-F with the fusion option, there are two fiberoptic interface ports for connection to the Fusion system; one primary and the other redundant.
	Remote Monitor	Connection to an optional Remote Status Monitor (RSM) or to RSM-DC (for Dry Contact connection) (not included in the standard transceiver kit)
	Management	Connection to 10Base-T SNMP management interface. Pins 1,2: TX and 3,6 RX. Pins (4,5) and (7,8) of this connector can be used for dry contact purposes, for Airlink flag and F/O flag alarms respectively

Note: Pins (4, 5) and (7, 8) of the management RJ45 connector can be used for dry contact purposes, for Airlink flag and F/O flag alarms respectively.

Alignment	***Telescope***	For fine alignment.

Power	***Power Supply***	Pluggable AC power supply (100 to 240 Vac) or DC power supply (35 to 60 Vdc)
	Slot for Power Supply	This slot can house an additional power supply to be fed from backup voltage source. This can be independent of primary voltage source for maximum redundancy.

Selectors (DIP Switch DS1 Toggles) *-- shown on Figure 1.3and 1.4*	Not in use	Not in use
Selectors (DIP Switch DS2 Toggles) *-- shown on Figure 1.3 and 1.4*	Mode Select (Toggles 1, 2)	Set the Operating Mode ALIGNMENT = Idle transmitted automatically NORMAL = Signal received via the F/O port is transmitted through the Airlink TX. Signal received via the Airlink RX is transmitted through the F/O TX. LOOPBACK= Data received by the F/O RX is directly returned through the F/O TX. REMOTE LOOP = Loops the electrical RX to the electrical TX and optical RX to the optical TX of the remote unit.
	Attenuation for Short distance link (Toggle 3)	Turning off 1 TX when the DIP switch toggle is moved to ON. (The LED L1 will turn off also). Use this oprtion for distances between 500 and 700m
	Fusion (Toggle 5)	This switch toggle enables working with MRV's Fusion system (Built-in fusion option or switch option). For additional information, see page 8. Switch toggle 5 OFF: Fusion not Active (Disabled) Switch toggle 5 ON: Fusion active (Enabled).
	Window Heater (Optional) (Toggle 6)	Used only with the heating option (To be specified in the PO). Switch toggle 6 OFF: The heater is disabled Switch toggle 5 ON: The heater is enabled. The heating will start operating only if one of the following conditions is present: or the temperature is lower than 15°C; or the humidity level in the air is above 80%. There is a controller with a thermostat inside the TereScope, which controls the heating in accordance with the above conditions.
	IP address set up (Toggle 8)	When the Switch toggle is on OFF position, the TereScope's IP address is the default one (shown on the back panel label: 10.0.0.101). To set a new IP address, please refer to the "IP address setting procedure for TereScope management card" file in the Manuals CD. The new IP address is valid only after the TereScope is powered off and on.
	Control Mode (Toggle 10)	When the Dip Switch toggle #10 is on OFF position, the TereScope is in the HARDWARE mode, i.e. the TereScope is controlled only by the TereScope itself by means of the switches on its back panel. When the Dip Switch toggle is on ON position, the TereScope is in the SOFTWARE mode i.e. the TereScope is controlled by the management Software and various functions can be activated by means of this management Software.

Indicators (7-segment display and LEDs)	Air RX Flag LED	Green LED indicates data received by the Airlink receiver. Turns ON at the threshold level.
	Air RX Sync LED	Yellow LED. Turns ON if the rate of the received Data matches the Data Rate set on the Data Rate DIP switch.
	F/O Main, RX Flag LED	Upper green LED indicates Data received by the Fiber Optic receiver. Turns ON at the threshold level.
	F/O Main, RX Sync LED	Lower green LED. Turns ON if the rate of the received Data matches the Data Rate set on the Data Rate DIP switch.
	F/O Redundant, RX Flag LED (Optional)	Upper green LED indicates Data received by the Fiber Optic receiver. Turns ON at the threshold level.
	F/O Redundant, RX Sync LED (Optional)	Lower green LED. Turns ON if the Fusion is active and there is synchronisation with the received Data.
	Optical Power 7-segment display	Digital readout indicates the Optical Power level received by the Airlink receiver.
	Alignment LED	Yellow LED. Turns ON if the Alignment Operating Mode is selected.
	Loop LED	Yellow LED. Turns ON in LOOPBACK mode. Flashing in Remote Loop mode.
	Fusion LED	Yellow LED. Turns ON if the Fusion mode is enabled. Flashing when the Fusion (radio back-up system) is active.
	Heating LED	Yellow LED. Turns ON if the heating mode is selected (Heating is enabled).
	SW Mode LED	Red LED. Turns ON if the SW Mode (SOFTWARE) Operating Mode is selected.
	Lasers status LEDs	There are 3 LEDs – L1, L2, L3 indicating if the lasers are switched on or off. If the LED is switched off, the laser is switched off. If the LED is switched ON, the laser is switched ON. When the DIP switch toggle #3 is moved to ON position the LED L1 and its corresponding laser will turn off
	PS1	Green LED. Turns ON when main power supply is active
	PS2	Green LED. Turns ON when redundant power supply is active
	Heater ON	Green LED. Turns ON when the heating of the front window is active. The heating will start operating only if one of the following conditions is present: or the temperature is lower than 15°C; or the humidity level in the air is above 80%. There is a controller with a thermostat inside the TereScope, which controls the heating in accordance with the above conditions. (The heating option is notstandard, and exists only if purchased)
	Management TX	Flashing when the RSM-SNMP is connected and the TereScope is transmitting management Data. (There is no Link indication)
	Management RX	Flashing when the RSM-SNMP is connected and the TereScope is receiving management Data. (There is no Link indication)

B. TS5000/G-F (Standard Model including Fusion option)

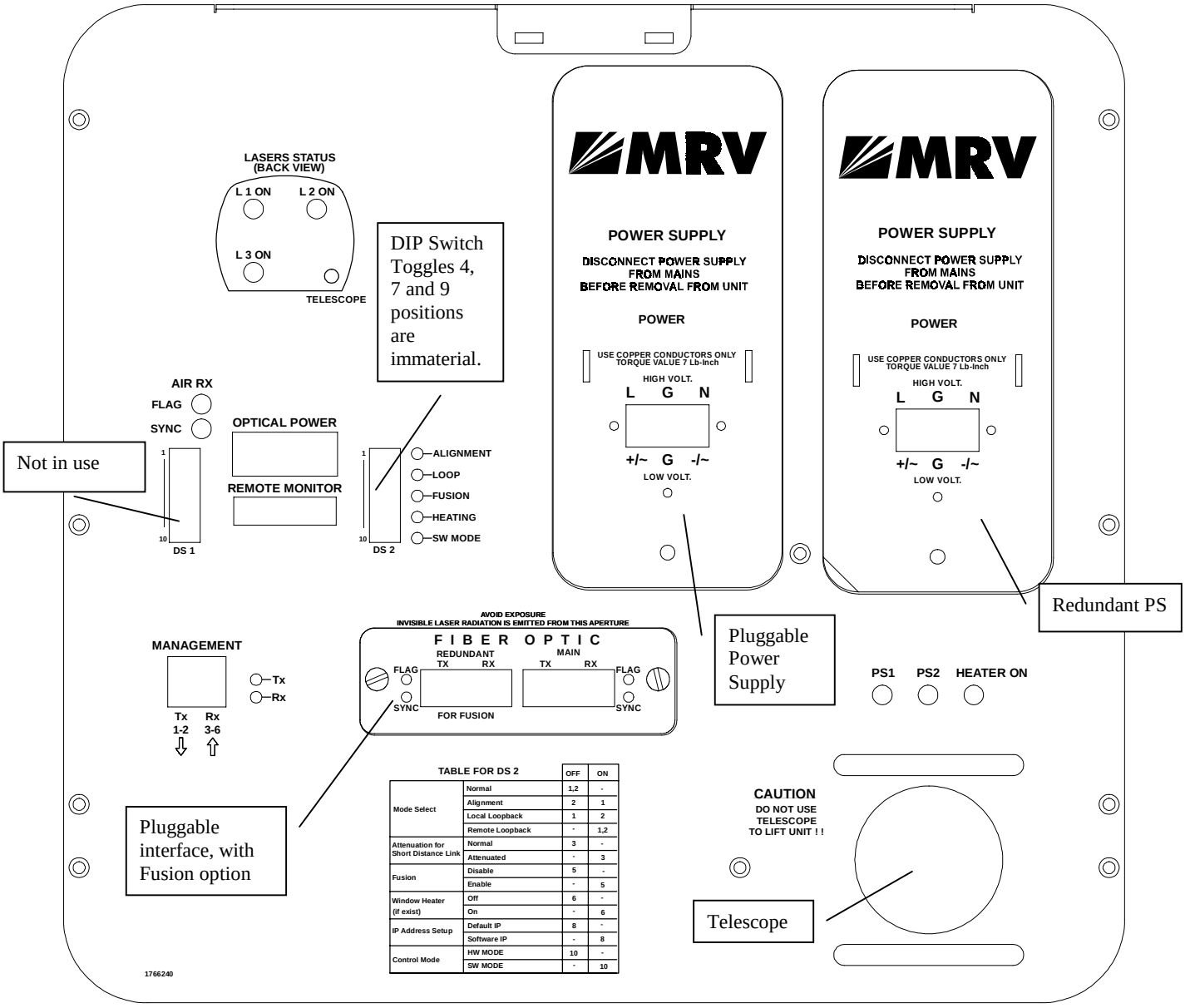

TABLE FOR DS 2

		OFF	ON
Mode Select	Normal	1,2	-
	Alignment	2	1
	Local Loopback	1	2
	Remote Loopback	-	1,2
Attenuation for Short Distance Link	Normal	3	-
	Attenuated	-	3
Fusion	Disable	5	-
	Enable	-	5
Window Heater (if exist)	Off	6	-
	On	-	6
IP Address Setup	Default IP	8	-
	Software IP	-	8
Control Mode	HW MODE	10	-
	SW MODE	-	10

Figure 1.4: TS5000/G-F with a redundant power supply Panel Schematic

This special TS5000/G-F model can be connected to the back-up radio system without special MRV's Switch and card supporting Fusion. This TereScope can be connected to any Switch (supporting 10/100) via standard converter, which should be connected to the optical port of the TereScope labeled "Redundant", while the back-up radio system is connected to the same Switch.

The TereScope can be also directly connected to MC (Media Converter) of the type 10/100 TX-100 FX (for example MRV's media converter MC102F). When the TereScope stops operating, the connectivity from the main optical module to the air channel stops and starts flowing into the second optical module designated for radio.

For more details please see pages 14 and 15

C. TS5000/155 (w/o Fusion and with one power supply)

The TS5000 supports most of the prevalent protocols in the 34-155 Mbps range. Special protocol, which is not on the list, can be ordered after coordination with the factory. **This model can be used for Open Protocol applications,** which ensures complete transparency **(including all data in the range of 1-155 Mbps.)** In this case maximum 2 dB of the performance is lost.

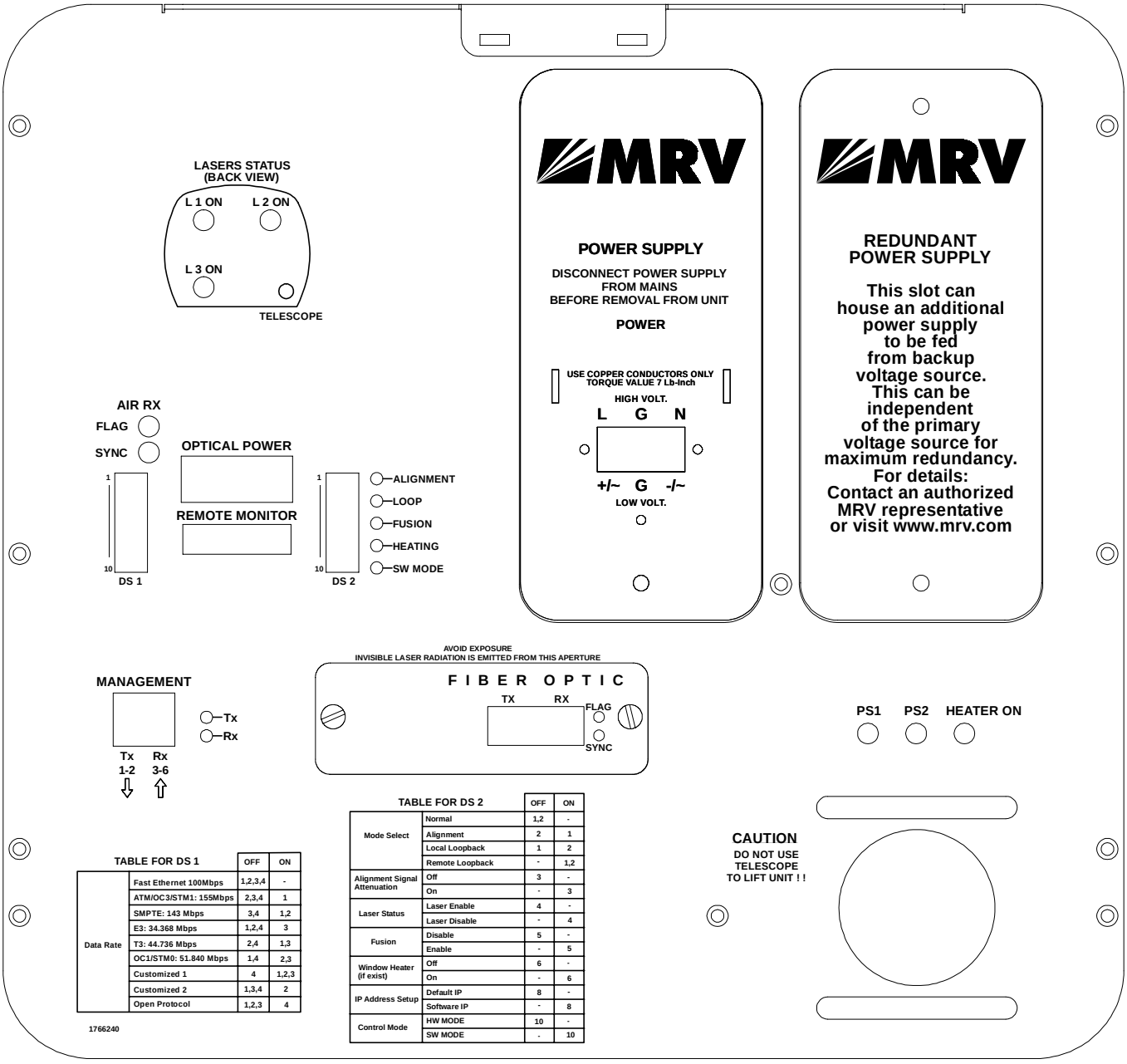

TABLE FOR DS 1

		OFF	ON
Data Rate	Fast Ethernet 100Mbps	1,2,3,4	-
	ATM/OC3/STM1: 155Mbps	2,3,4	1
	SMPTE: 143 Mbps	3,4	1,2
	E3: 34.368 Mbps	1,2,4	3
	T3: 44.736 Mbps	2,4	1,3
	OC1/STM0: 51.840 Mbps	1,4	2,3
	Customized 1	4	1,2,3
	Customized 2	1,3,4	2
	Open Protocol	1,2,3	4

TABLE FOR DS 2

		OFF	ON
Mode Select	Normal	1,2	-
	Alignment	2	1
	Local Loopback	1	2
	Remote Loopback	-	1,2
Alignment Signal Attenuation	Off	3	-
	On	-	3
Laser Status	Laser Enable	4	-
	Laser Disable	-	4
Fusion	Disable	5	-
	Enable	-	5
Window Heater (if exist)	Off	6	-
	On	-	6
IP Address Setup	Default IP	8	-
	Software IP	-	8
Control Mode	HW MODE	10	-
	SW MODE	-	10

Figure 1.5: TS5000/155 Standard Model Panel Schematic

Back Panel Description

Table 3: TS5000/155 Back Panel Controls, Interfaces, and Indicators

Connectors	Power	Power source Terminal Block (Main or UPS). AC power supply (100 to 240 Vac) or DC power supply (35 to 60 Vdc)
	Fiber optic	Fiber Optic interface for connection to the peripheral equipment. The standard interface is MM 1310nm SC connector; other interfaces are available upon request (refer to price list or data sheet). In model TS5000/155-F with the fusion option, there are two fiberoptic interface ports for connection to the Fusion system; one primary and the other redundant.
	Remote Monitor	Connection to an optional Remote Status Monitor (RSM) or to RSM-DC (for Dry Contact connection) (not included in the standard transceiver kit)
	Management	Connection to 10Base-T SNMP management interface. Pins 1,2: TX and 3,6 RX. Pins (4,5) and (7,8) of this connector can be used for dry contact purposes, for Airlink flag and F/O flag alarms respectively

Note: Pins (4, 5) and (7, 8) of the management RJ45 connector can be used for dry contact purposes, for Airlink flag and F/O flag alarms respectively.

Alignment	***Telescope***	For fine alignment.

Power	***Power Supply***	Pluggable AC power supply (100 to 240 Vac) or DC power supply (35 to 60 Vdc)
	Slot for Power Supply	This slot can house an additional power supply to be fed from backup voltage source. This can be independent of primary voltage source for maximum redundancy.

Selectors (DIP Switch DS1 Toggles) *---shown on Figures 1.5and 1.6*	Data Rate (Toggles 1, 2, 3 and 4)	Set the transmission rate of the transceiver (internal clock). - Fast Ethernet: 1,2,3,4 OFF - ATM/OC3/STM1: 155 Mbps: 2,3,4 OFF, 1 ON - SMPTE 143 Mbps: 3,4 OFF, 1,2 ON - E3: 34.368 Mbps 1,2,4 OFF, 3 ON - T3: 44.736 Mbps: 2,4 OFF, 1,3 ON - OC1/STM0: 51.840 Mbps: 1,4 OFF, 2,3 ON - Customized 1 : 4 OFF, 1,2,3 ON - Customized 2 : 1,3,4 OFF, 2 ON - Open Protocol: 1,2,3 OFF, 4 ON.
Selectors (DIP Switch DS2 Toggles) *-- shown in Figures 1.5 and 1.6*	Mode Select (Toggles 1, 2)	Set the Operating Mode ALIGNMENT = Idle transmitted automatically NORMAL = Signal received via the F/O port is transmitted through the Airlink TX. Signal received via the Airlink RX is transmitted through the F/O TX. LOOPBACK= Data received by the F/O RX is directly returned through the F/O TX. REMOTE LOOP = Loops the electrical RX to the electrical TX and optical RX to the optical TX of the remote unit.
	Alignment Signal Attenuation (Toggle 3)	ATTENUATION: The alignment signal is attenuated (~20db) when the DIP switch toggle #3 is moved to ON position.(to use when the installation distance is less than 900m only for alignment mode). Switch back to OFF position for normal mode.
	Laser Status (Toggle 4)	Turning off TXs lasers when the DIP switch toggle #4 is moved to ON
	Fusion (Toggle 5)	This switch toggle enables working with MRV's Fusion system (Built-in fusion option or switch option). For additional information, see page 13. Switch toggle 5 OFF: Fusion not Active (Disabled) Switch toggle 5 ON: Fusion active (Enabled).
	Window Heater (Optional) (Toggle 6)	Used only with the heating option (To be specified in the PO). Switch toggle 6 OFF: The heater is disabled Switch toggle 5 ON: The heater is enabled. The heating will start operating only if one of the following conditions is present: or the temperature is lower than 15°C; or the humidity level in the air is above 80%. There is a controller with a thermostat inside the TereScope, which controls the heating in accordance with the above conditions.
	IP address set up (Toggle 8)	When the Switch toggle is on OFF position, the TereScope's IP address is the default one (shown on the back panel label: 10.0.0.101). To set a new IP address, please refer to the "IP address setting procedure for TereScope management card" file in the Manuals CD. The new IP address is valid only after the TereScope is powered off and on.
	Control Mode (Toggle 10)	When the Dip Switch toggle #10 is on OFF position, the TereScope is in the HARDWARE mode, i.e. the TereScope is controlled only by the TereScope itself by means of the switches on its back panel. When the Dip Switch toggle is on ON position, the TereScope is in the SOFTWARE mode i.e. the TereScope is controlled by the management Software and various functions can be activated by means of this management Software.

Indicators (7-segment display and LEDs)	Air RX Flag LED	Green LED indicates data received by the Airlink receiver. Turns ON at the threshold level.
	Air RX Sync LED	Yellow LED. Turns ON if the rate of the received Data matches the Data Rate set on the Data Rate DIP switch.
	F/O Main, RX Flag LED	Upper green LED indicates Data received by the Fiber Optic receiver. Turns ON at the threshold level.
	F/O Main, RX Sync LED	Lower green LED. Turns ON if the rate of the received Data matches the Data Rate set on the Data Rate DIP switch.
	F/O Redundant, RX Flag LED (Optional)	Upper green LED indicates Data received by the Fiber Optic receiver. Turns ON at the threshold level.
	F/O Redundant, RX Sync LED (Optional)	Lower green LED. Turns ON if the Fusion is active and there is synchronisation with the received Data.
	Optical Power 7-segment display	Digital readout indicates the Optical Power level received by the Airlink receiver.
	Alignment LED	Yellow LED. Turns ON if the Alignment Operating Mode is selected.
	Loop LED	Yellow LED. Turns ON in LOOPBACK mode. Flashing in Remote Loop mode.
	Fusion LED	Yellow LED. Turns ON if the Fusion mode is enabled. Flashing when the Fusion (radio back-up system) is active.
	Heating LED	Yellow LED. Turns ON if the heating mode is selected (Heating is enabled).
	SW Mode LED	Red LED. Turns ON if the SW Mode (SOFTWARE) Operating Mode is selected.
	Lasers status LEDs	There are 3 LEDs – L1, L2, L3 indicating if the lasers are switched on or off. If the LED is switched off, the laser is switched off. If the LED is switched ON, the laser is switched ON. When the DIP switch toggle #3 is moved to ON position the LED L1 and its corresponding laser will turn off
	PS1	Green LED. Turns ON when main power supply is active
	PS2	Green LED. Turns ON when redundant power supply is active
	Heater ON	Green LED. Turns ON when the heating of the front window is active. The heating will start operating only if one of the following conditions is present: or the temperature is lower than 15°C; or the humidity level in the air is above 80%. There is a controller with a thermostat inside the TereScope, which controls the heating in accordance with the above conditions. (The heating option is not standard, and exists only if purchased)
	Management TX	Flashing when the RSM-SNMP is connected and the TereScope is transmitting management Data. (There is no Link indication)
	Management RX	Flashing when the RSM-SNMP is connected and the TereScope is receiving management Data. (There is no Link indication)

D. TS5000/155-F (Standard Model including Fusion option)

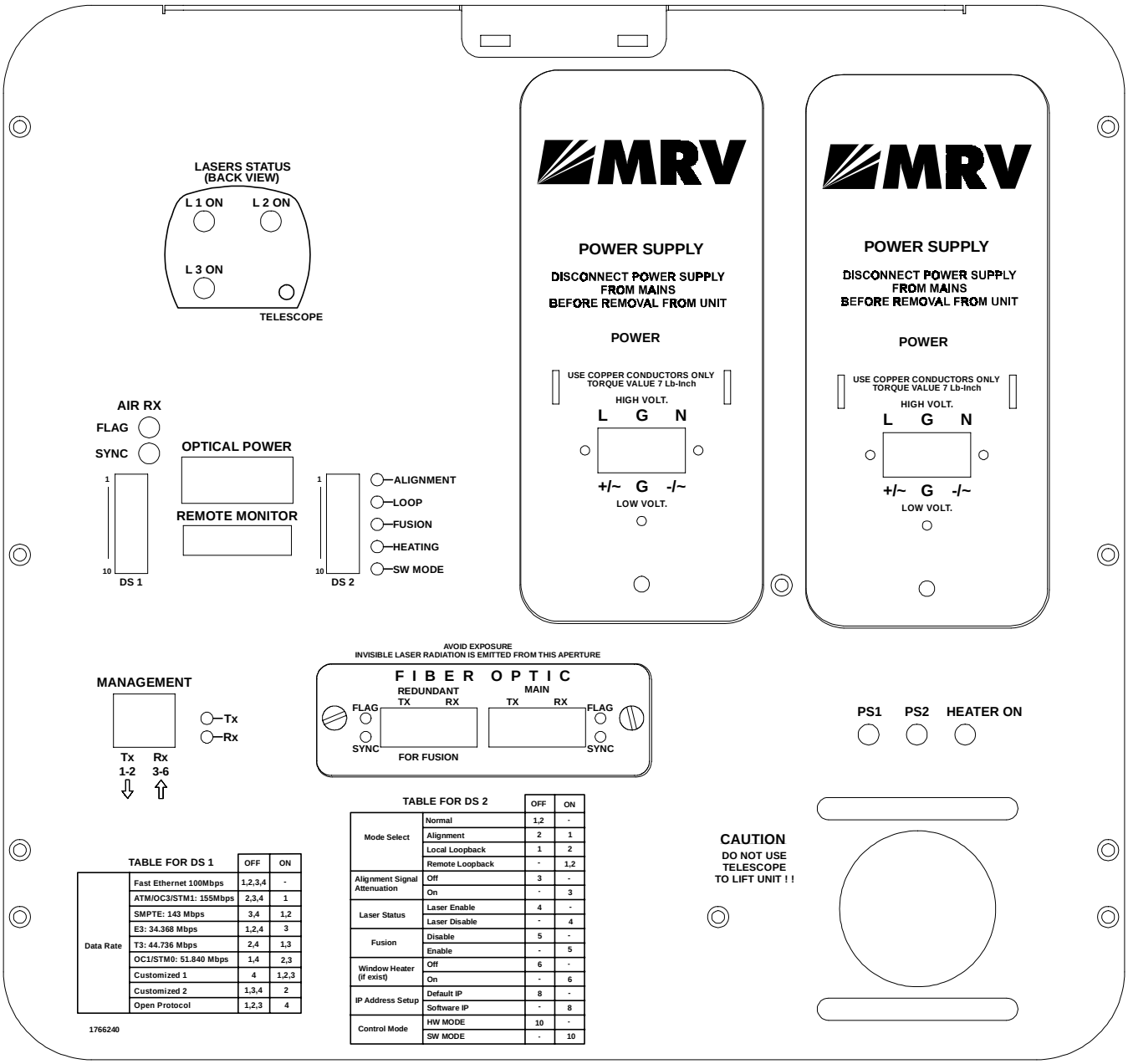

TABLE FOR DS 1

		OFF	ON
Data Rate	Fast Ethernet 100Mbps	1,2,3,4	-
	ATM/OC3/STM1: 155Mbps	2,3,4	1
	SMPTE: 143 Mbps	3,4	1,2
	E3: 34.368 Mbps	1,2,4	3
	T3: 44.736 Mbps	2,4	1,3
	OC1/STM0: 51.840 Mbps	1,4	2,3
	Customized 1	4	1,2,3
	Customized 2	1,3,4	2
	Open Protocol	1,2,3	4

TABLE FOR DS 2

		OFF	ON
Mode Select	Normal	1,2	-
	Alignment	2	1
	Local Loopback	1	2
	Remote Loopback	-	1,2
Alignment Signal Attenuation	Off	3	-
	On	-	3
Laser Status	Laser Enable	4	-
	Laser Disable	-	4
Fusion	Disable	5	-
	Enable	-	5
Window Heater (if exist)	Off	6	-
	On	-	6
IP Address Setup	Default IP	8	-
	Software IP	-	8
Control Mode	HW MODE	10	-
	SW MODE	-	10

Figure 1.6: TS5000/155-F with a redundant power supply Panel Schematic

This special TS5000/155-F model can be connected to the back-up radio system without special MRV's Switch and card supporting Fusion. This TereScope can be connected to any Switch (supporting 10/100) via standard converter, which should be connected to the optical port of the TereScope labeled "Redundant", while the back-up radio system is connected to the same Switch.

The TereScope can be also directly connected to MC (Media Converter) of the type 10/100 TX-100 FX (for example MRV's media converter MC102F). When the TereScope stops operating, the connectivity from the main optical module to the air channel stops and starts flowing into the second optical module designated for radio.

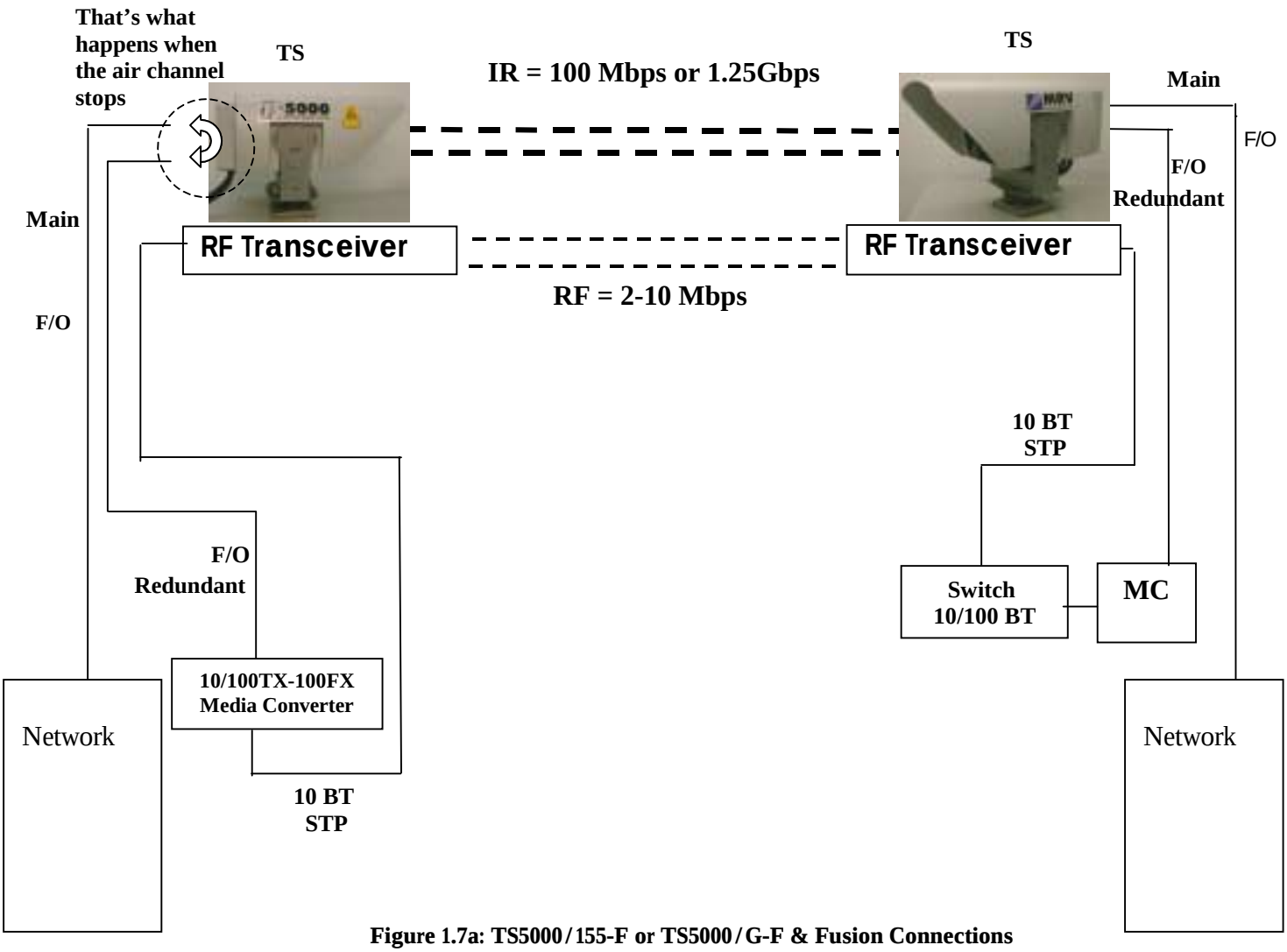

Figure 1.7a: TS5000/155-F or TS5000/G-F & Fusion Connections

For Description of the Back Panel and all the functions see Paragraph B for TS5000/G-F and paragraph D for TS5000/155-F, Figure 1.4 or 1.6 – TS5000 with Fusion model, page 8 or 13.

Fusion Operation Mode

When at least one of the air channels (IR) is cut for more than one second or drops to approx. 40mV[1] at the display readout:

1. TereScope switches to Fusion mode,
2. Data is transmitted from Main module to Redundant module without passing through the air channel,
3. The signal is converted to 10 BT by the Switch and the data Rate decreases to 2-10 Mbps.

The system switches back to IR channel (TereScope) only when the display readout on both sides increases to approx. 120mV[2] for TS5000/155 and 60mV for TS5000/G.

<u>Note</u>: To activate the Fusion option, DIP Switch DS2 toggle 5 to the ON position.

[1] 100mV for TS5000/155 Rev 3.0 and less
[2] 200mV for TS5000/155 Rev 3.0 and less

Fusion

Maximizing Link Availability in All Weather Conditions.

The TereScope Fusion was designed to combine the best features of two transport mediums, laser light and radio waves, to form a single, seamless, wireless communication link between network devices. By leveraging both technologies, we can provide the 99.999% availability that your network requires.

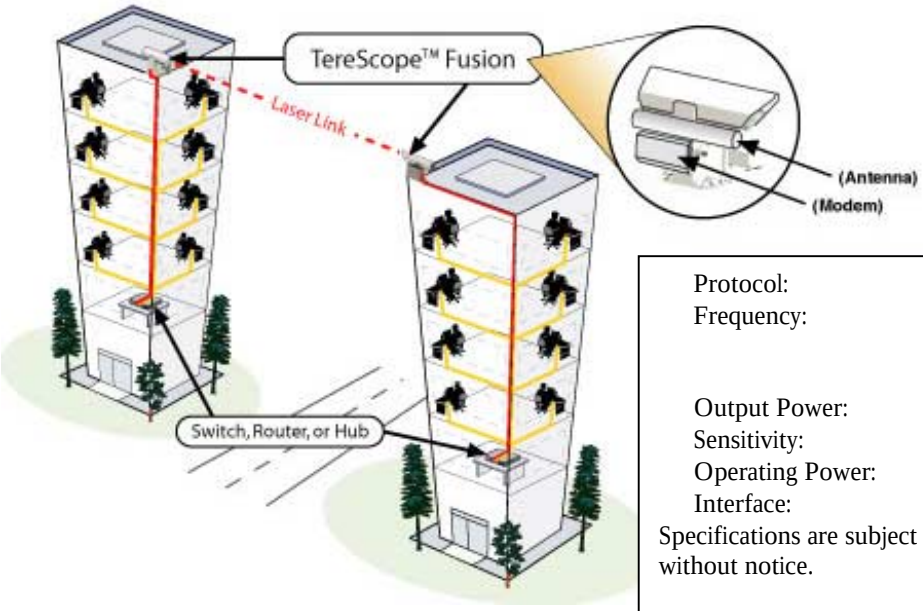

Protocol:	10Base-T (IEEE 802.1 1 b)
Frequency:	2.4 - 2.4835 GHz ISM band (ETSI, FCC 2.4 – 2.497 GHz (Japan)
Output Power:	-4 to 24 dBm
Sensitivity:	-85 dBm
Operating Power:	110/220 VAC, 500/250 mA
Interface:	Shielded RJ45

Specifications are subject to change at any time without notice.

Figure 1.7b: TS & Fusion

The TereScope Fusion has been specifically constructed to maximize link availability between network nodes. These systems use the internationally unlicensed, 2.4 GHz ISM band and are used as a backup for a number of TereScope systems.

TereScope Fusion systems have an optical wireless link that provides Fast Ethernet connectivity as the primary link and Ethernet RF as the backup link. These systems operate in most weather conditions, including heavy rain, snow and fog, to nearly 100% link availability. Ease of installation and freedom from licensing make these systems very simple to deploy.

E. TS5000/ETH - Ethernet System

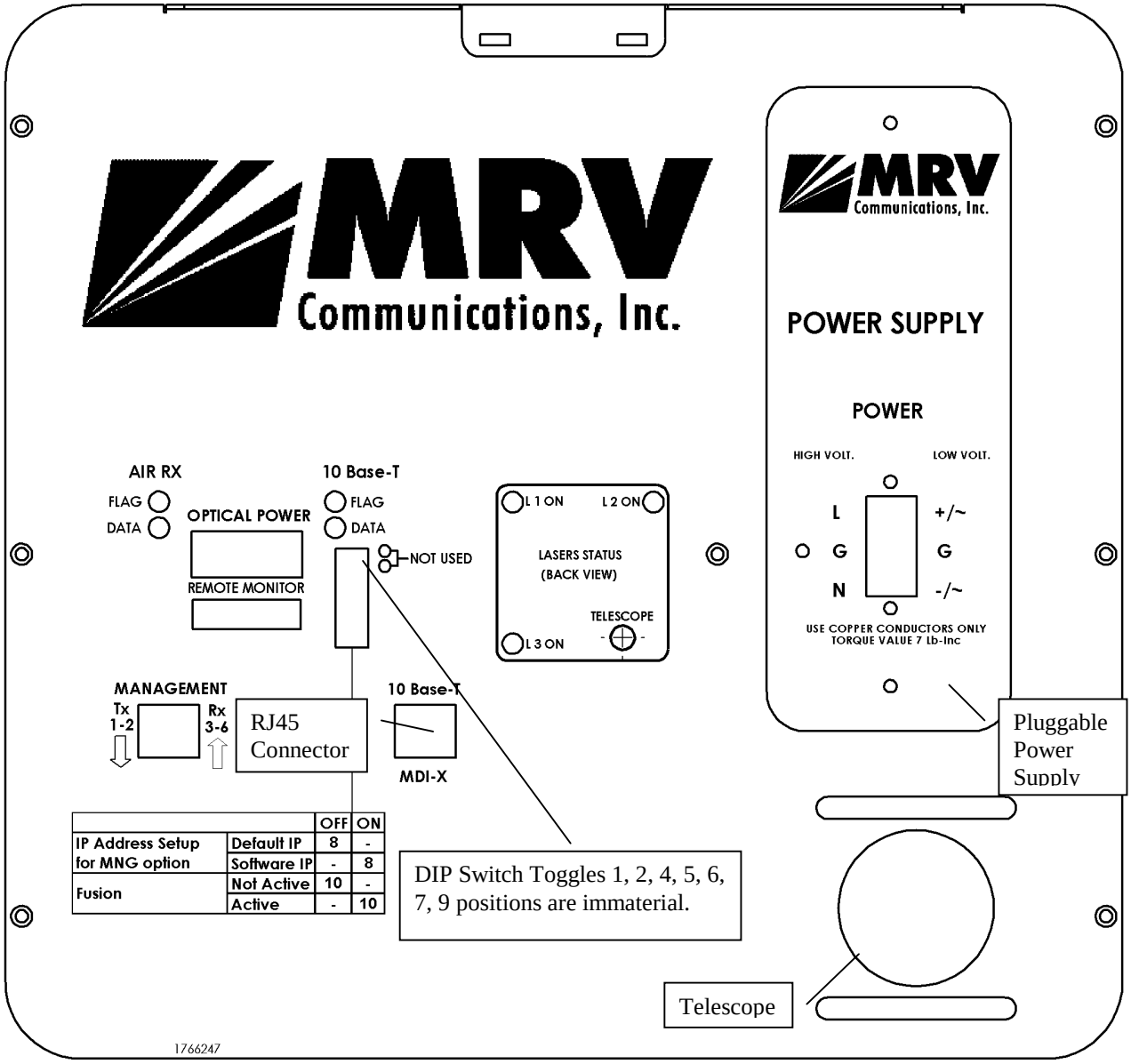

		OFF	ON
IP Address Setup for MNG option	Default IP	8	-
	Software IP	-	8
Fusion	Not Active	10	-
	Active	-	10

Figure 1.8: TS5000/ETH Model Back Panel

Back Panel Description

Table 4: TS5000/ETH Model Back Panel Controls, Interfaces, and Indicators

Connectors	Power	Power source Terminal Block (Main or UPS). AC power supply (100 to 240 Vac) or DC power supply (35 to 60 Vdc)
	10Base-T	Copper interface (RJ45) for STP cables. MDI-X connection.
	Remote Monitor	Connection to an optional Remote Status Monitor or to RSM-DC (for Dry Contact connection) (not included in the standard transceiver kit)
	Management (10baseT)	Connection to 10Base-T SNMP management interface. Pins 1,2: TX and 3,6 RX.
Selectors (DIP Switch Toggles) -- *shown on Figure 1.8*	IP address set up	When the Switch toggle is on OFF position, the TereScope's IP address is the default one (shown on the back panel label: 10.0.0.101). To set a new IP address, please refer to the "IP address setting procedure for TereScope management card" file in the Manuals CD. The new IP address is valid only after the TereScope is powered off and on.
	Fusion	This switch enables working with MRV's Fusion system. For additional info see page 7 Toggle #10 OFF: Fusion Non Active: Toggle #10 ON: Fusion active.

Note: Pins (4,5) of the main RJ45 connector can be used for dry contact purposes, for Airlink flag alarm.

Indicators (7-segment display, LEDs)	Air RX Link LED	Green LED indicates that a signal is received by the Airlink receiver. Switches ON at the threshold level
	Air RX Data LED	Yellow LED indicates Data transfer through the Airlink receiver
	10Base-T Link LED	Green LED indicates a signal is received by the 10BaseT interface. Switches ON at the threshold level
	10Base-T Data LED	Yellow LED indicates Data transfer through the 10BaseT interface
	Optical Power 7-segment display	Digital readout indicates in mV the Optical Power level received by the Airlink receiver

F. TS5000/4X1 - 4E1 or 4T1 System

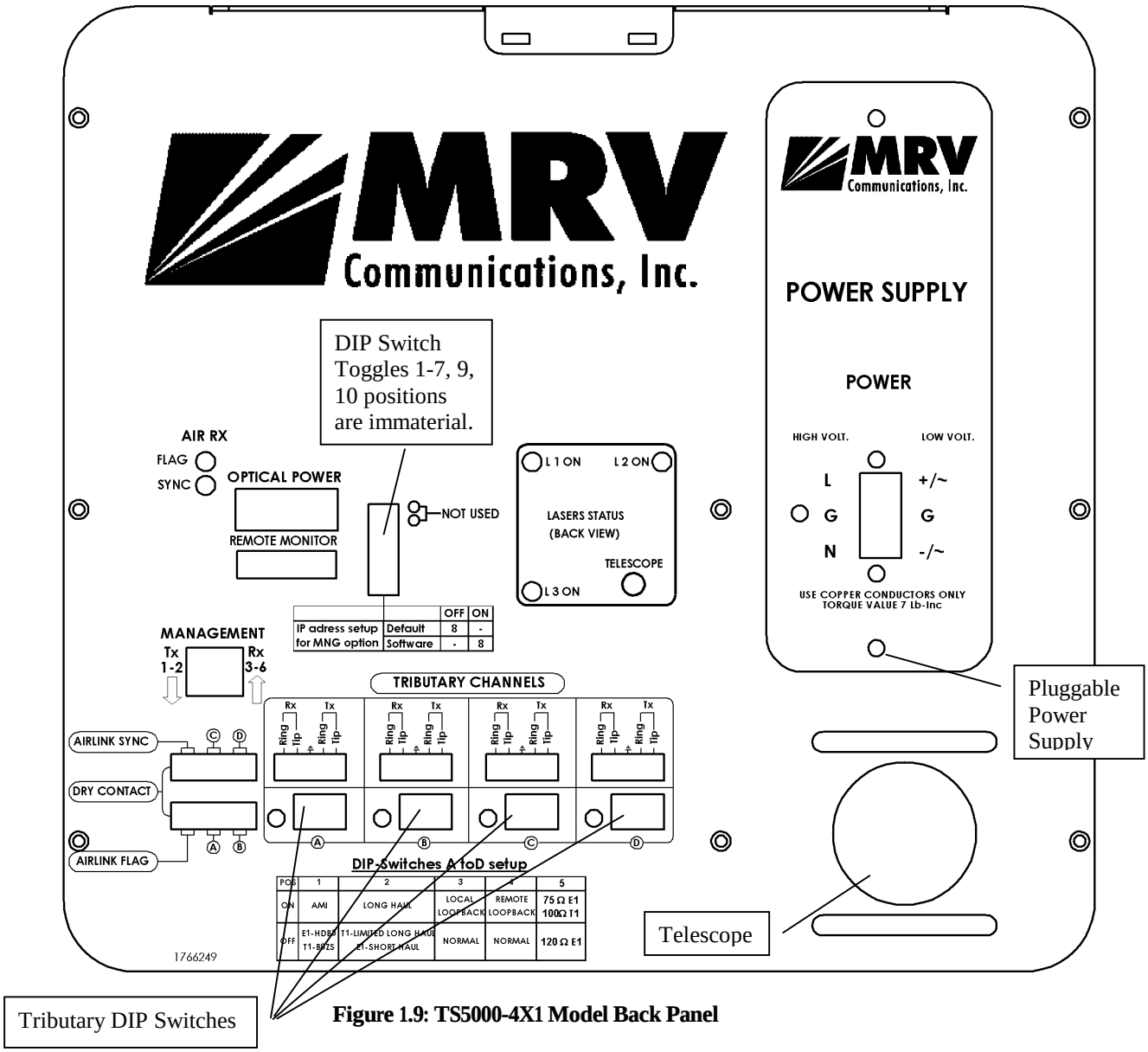

Figure 1.9: TS5000-4X1 Model Back Panel

Back Panel Description

Table 5: 4E1/4T1 Back Panel Controls, Interfaces, and Indicators

Connectors	Power	Power source Terminal Block (Main or UPS). AC power supply (100 to 240 Vac) or DC power supply (35 to 60 Vdc)
	4 Data Connectors	4xCopper interface. Four green universal connectors A to D to be used with coax or STP cables.
	Remote Monitor	Connection to an optional Remote Status Monitor or to RSM-DC (for Dry Contact connection) (not included in the standard transceiver kit)
	Management (10baseT)	Connection to 10Base-T SNMP management interface. Pins 1,2: TX and 3,6 RX.
	Dry Contact	6 dry contact outputs: 1 for each interface port (total of 4) 1 for air-link flag 1 for air-link sync

Indicators (7-segment display, LEDs)	AirLink Flag	Green LED indicates that a signal is received by the Airlink receiver. Switches ON at the threshold level.
	Airlink Sync	Yellow LED indicates that the air signal received from the opposite side is synchronized with the local transceiver. LED switches ON when two transceivers are synchronized.
	Tributary Link LEDs	4 yellow LEDs. Every LED indicates a signal is received by the electrical interface in its channel. LED switches ON when an outside signal is received. The channels are numbered from A to D.
	Optical Power	Digital readout indicates in mV the Optical Power level received by the Airlink receiver

Selectors (Upper DIP Switch Toggles) -- *shown on Figure 1.9*	IP address set up	When the Switch toggle is on OFF position, the TereScope's IP address is the default one (shown on the back panel label: 10.0.0.101). To set a new IP address, please refer to the "IP address setting procedure for TereScope management card" file in the Manuals CD. The new IP address is valid only after the TereScope is powered off and on.
Selectors (Lower DIP Switch Toggles A to D) -- *shown on Figure 1.9 (All DIP switche toggles A to D can be set separately.)*	Line coding (Toggle No 1)	Use to select the Coding mode: AMI or HDB3 for E1 or B8ZS for T1.
	Receive Sensitivity (Toggle No 2)	Use to select Long Haul or Short Haul. Depends on the length of the used cable: For the length of less than 200 m, select **Short Haul**, for the length over 200m, select **Long Haul.**
	Mode of Operation (Toggles 3& 4)	Sets the Operating mode: **LOCAL LOOP** = Loops the electrical RX to the electrical TX and Optical RX to the optical TX **REMOTE** LOOP =Loops the electrical RX to the electrical TX and optical RX to the optical TX of the remote unit. **NORMAL** = Signal received through the electrical RX is transmitted through the Airlink TX to opposite RX. Signal received through Airlink RX is transmitted through the electrical TX (Normal = 3& 4 OFF).
	Impedance (Toggle 5)	Used to match the cable impedance. For E1 75 or T1 100 – ON position For E1 120 – OFF position

Dip switch setting

Every DIP switch is set up for the channel above it.

Table 5: Lower Dip Switches Setting

Switch Position	**Line coding**	**Receive Sensitivity**	**Operation Mode**		**Impedance**
	1	2	3	4	5
ON	AMI	Long Haul	Local Loopback	Remote Loopback	E1: 75 Ω T1: 100 Ω
OFF	E1: HDB3 T1: B8ZS	T1: Limited LH E1: Short Haul	Normal	Normal	E1: 120 Ω

Loop and Remote Loop Operation Mode

Loop

In this state, the device performs a loop on the twisted pair through the Line Interface, as well as another loop from AIR RX to AIR TX.

Local Loop back

The device on the side of the technician is in LOOP state when dipswitch “1” is “ON” and Dipswitch “2” is “OFF” (for 4 E1: Dipswitch 3 ON & 4 OFF).

Remote Loop

The device on the opposite side turns to loop state by being controlled from the near device (Master) – dipswitch “2” in “ON” and dipswitch “1” is “OFF” (for 4E1: Dipswitch 4 ON and Dipswitch 3 OFF).
In the opposite device (Slave), both dipswitches – 1 and 2 – should be “OFF” (Normal)(for 4E1 Dipswitches 3&4 OFF).
When turning off the Master, the Slave exits Loop state.
When the Slave does not receive an optical signal for the duration of 0.8 seconds, it exits Loop state. In this situation, when electronic Reset was not performed on Master, the technician should shut off the device and reactivate it.

Monitoring and Management options

1 - Management

The TS is manageable by using SNMP option. SNMP monitoring can be performed via MegaVision, MRV's SNMP software.

RJ45 Connection for SMNP Interface

Figure 1.10a: SNMP + TS.

Figure 1.10b : Megavision

2 - Dry contact

RSM-DC

Figure 1.11: RSM-DC + TS

The TS can be connected to dry contact box (RSM-DC). The RSM-DC is directly attached to TS.

3 - RSM

RSM

RSM connection

Figure 1.12: RSM + TS

The TS can be connected to monitoring unit: RSM. The connection between the TS and the RSM is made with 7 wires twisted cable.

Typical Connection

1 - Fiber Connection

In order to implement a connection, each transceiver must be connected to the peripheral/testing equipment through fiber optic cables. A correct connection is notified by the display on the back panel of the transceiver (see the section Display and Results pages 36 - 37).

IT IS A CROSS CONNECTION:

TX ➔RX AND RX ➔ TX

Scheme of the Connection to peripheral equipment

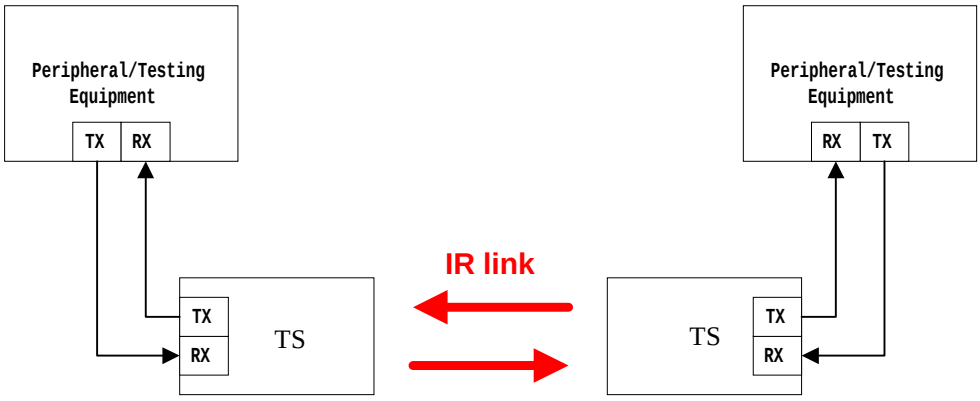

Figure 1.13: Typical Connection for Models 155 and 155-F

2 - Copper Connection

In order to implement a connection, each transceiver must be connected to the peripheral/testing equipment through a 2 pairs STP cable. A correct connection is notified by the display on the back panel of the transceiver (see the section Display and Results pages 37 and 38).

Scheme of the Connection to the peripheral equipment

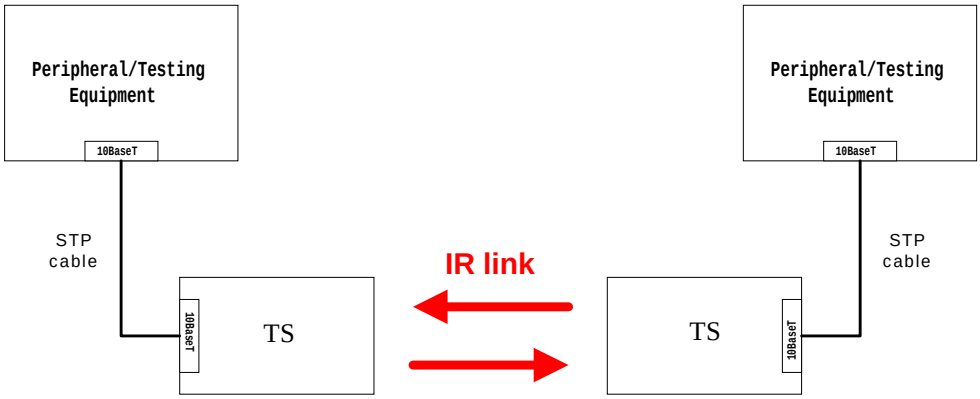

Figure 1.14: Typical Connection for Models ETH and 4X1

For 4E1/4T1 the 4 channels (or less as required) are to be connected separately.

When testing the model 4X1, the matching ports on the two TS5000 heads must be connected, for e.g, if Channel A is connected on one head, Channel A must be connected on the other head as well.

Chapter

2

Site Survey

The first step before every installation is to visit the sites to be linked. This in order to make sure that the connection is feasible, to find out potential obstacles or difficulties and to decide on the location and mounting points of the transceivers

Line of Sight

An imperative condition for linking two distant buildings is that the two mounting sites must be within a clear sight of each other.

Pay attention to:

- Growing vegetation and increasing foliage during spring
- Building sites (cranes movements, ...)
- Chimneys (drained away smokes could block the beam from time to time).

Orientation

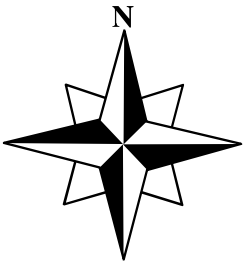

As direct sunlight could overload the airlink receiver and generate its saturation, avoid as far as possible the East to West path link.

Note
In case this is not possible the surrounding buildings could shield the transceiver from the direct sunlight otherwise outages lasting several minutes (depending on the time of the year and the angle of the sun) could occur. The system will fully recover once the sun is out of the receiver field of view.

Location & Range

1. The mounting of the transceiver must be extremely rigid (preventing the installation from twists of 1 mrad). The key to the required rigidity is to attach the mounting accessories on strong mounting points such as:
   - Stiff building structures
   - Concrete or reinforced concrete surfaces

(1) In case such situations could not be bypassed, special mounting accessories and techniques must be designed and considered (see section Particular Figure Cases\Techniques page 35)

Prefer	Avoid	Pay attention to
Concrete Parapet Structural wall or column	Old constructions Soft material (asphalt, etc.) Non-uniform surfaces Wooden and metal structures	Colored windows Double glazing The proximity of power radio antennas

For reasons of convenience, it is always preferable to install the units indoors as long as all the required conditions previously described are satisfied and the customer/building owner allows it. However, when windows are present in the beam path, the attenuating factor of the glass must be considered regarding the distance and the required fade margin.

2. Referring to the data in Appendix A: Product Specifications, set and record the distance between the two TereScopes of the link. (You can use any of the following equipment to determine the distance: rangefinder laser binoculars, GPS receiver, maps...)
3. Noting that two TereScope units are required per link, record the quantity of each model of the TereScope required.
4. Record the bearing to the opposite site by compass.
5. Record the number of links to be installed at the site.
6. Note whether additional sheltering is needed for the TereScope, for e.g., against strong winds (120km/h or more)

CONSULT FACTORY IN CASE OF DOUBT !

Figure 2.1 and Figure 2.2 show optimal and acceptable locations for the TereScope links. Notice that in both figures the TereScopes are mounted on rooftop edges and high enough above the ground.

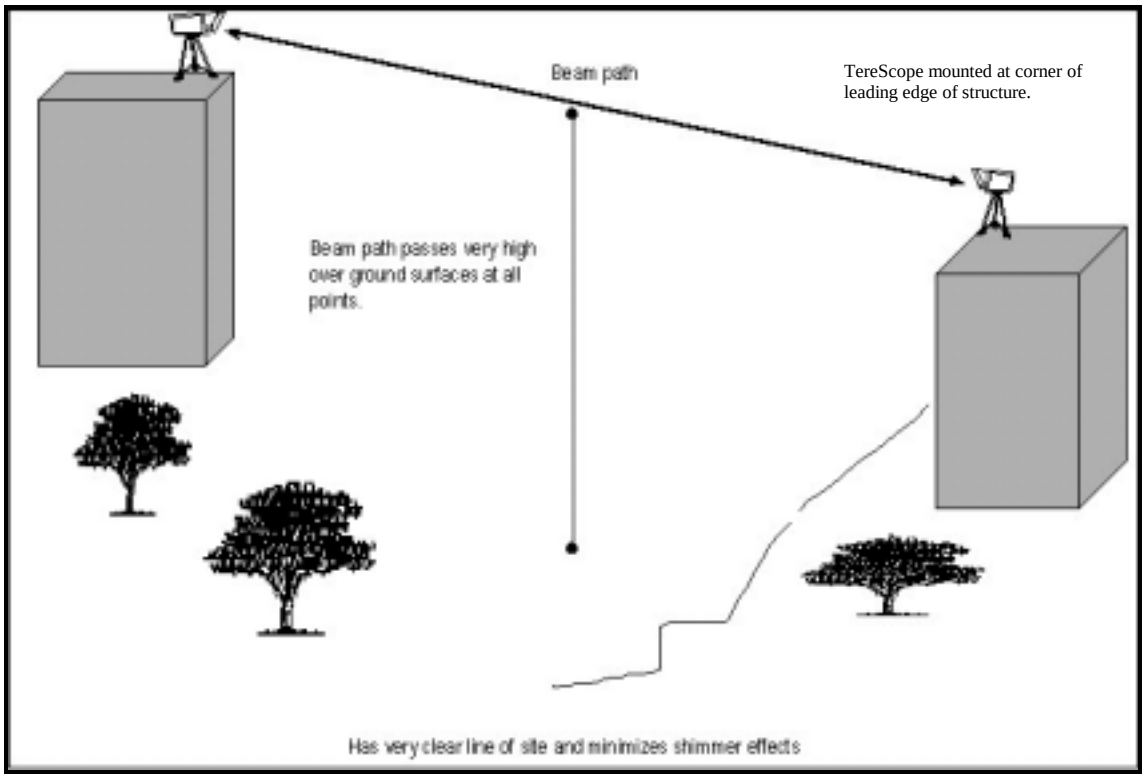

Figure 2.1: Optimal Mounting

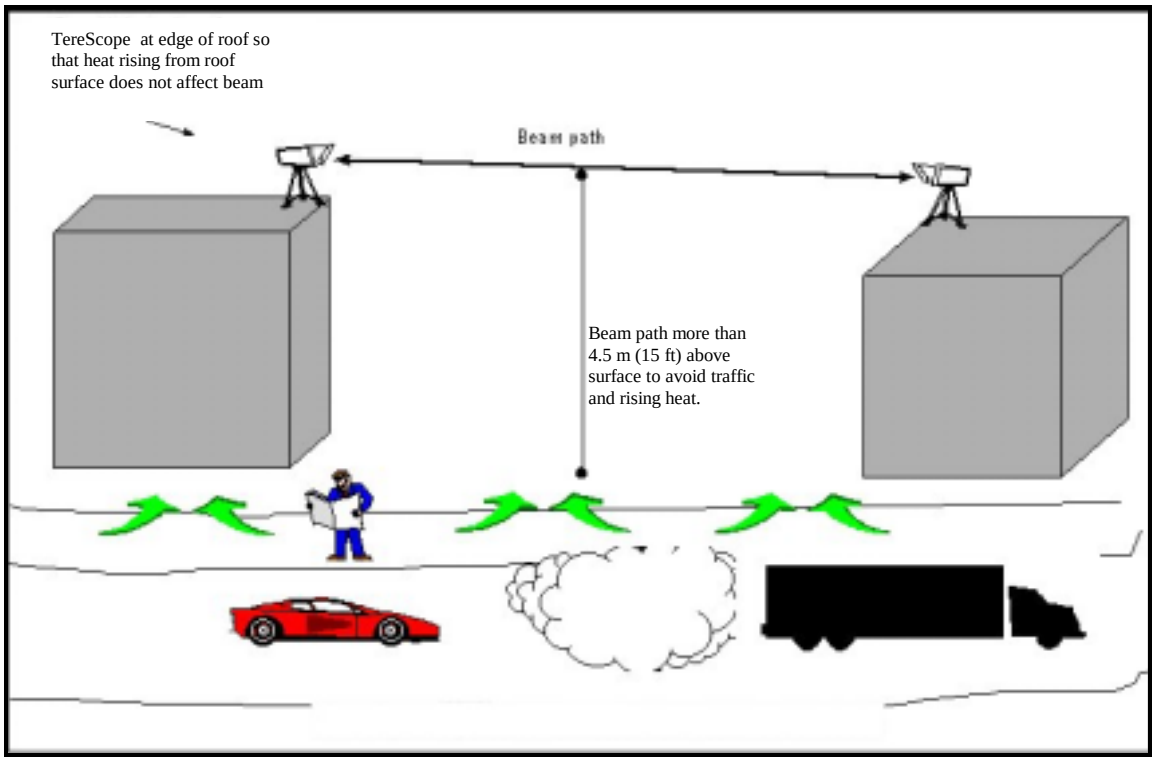

Figure 2.2: Acceptable Mounting

Figure 2.3 shows an unrecommended TereScope link location because of interference by IR. Notice that the TereScopes are mounted far from the rooftop edges or are too close to the ground.

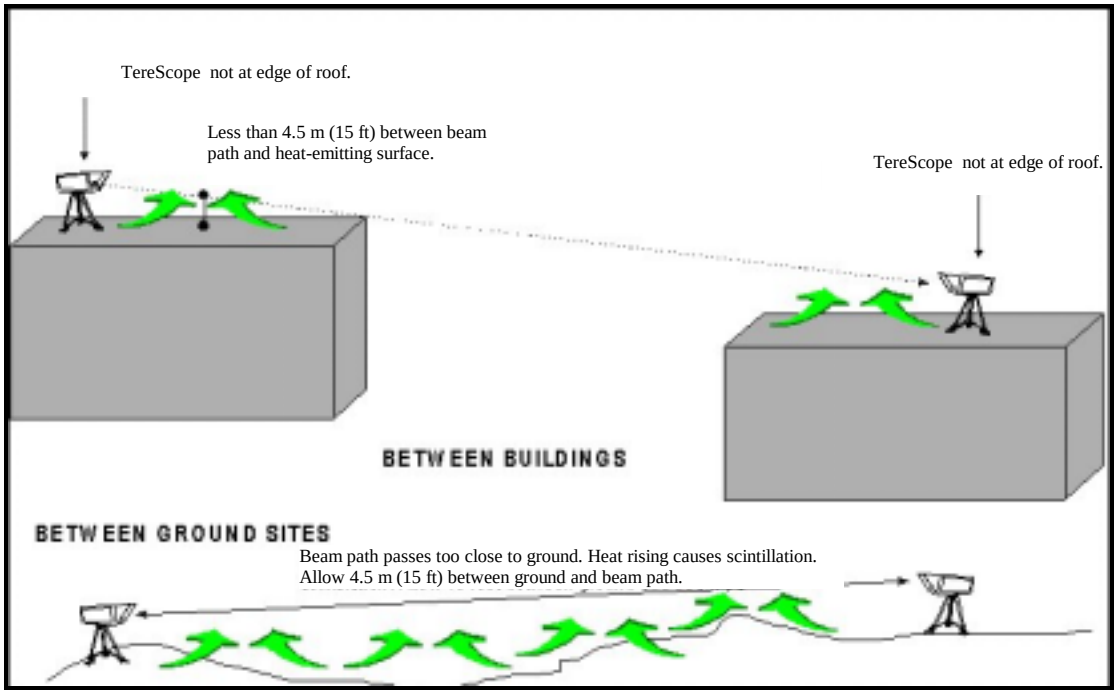

Figure 2.3: Unrecommended Mounting

Figure 2.4 shows an *unacceptable* TereScope link location because of interference by passing vehicles. Notice that the TereScopes are mounted far from the rooftop edges and not high enough above the ground.

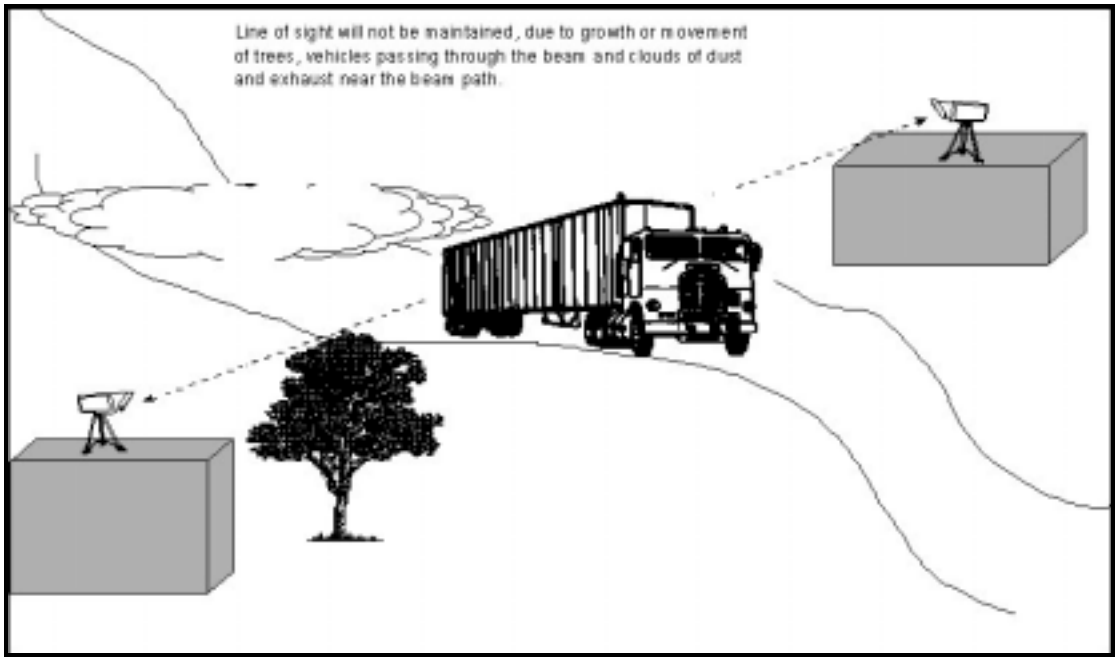

Figure 2.4: Unacceptable Mounting

Mounting Environment & Stability

1. When deciding the mounting location, you should look on the rooftop for vibration sources such as compressors, elevators, motors, and try to avoid them.
2. Photograph the mounting location so as to select the best mounting option.
   Figure 2.5 shows mounting locations on a rooftop in descending order of preference. Location **1** is the best; location **7** is the worst.

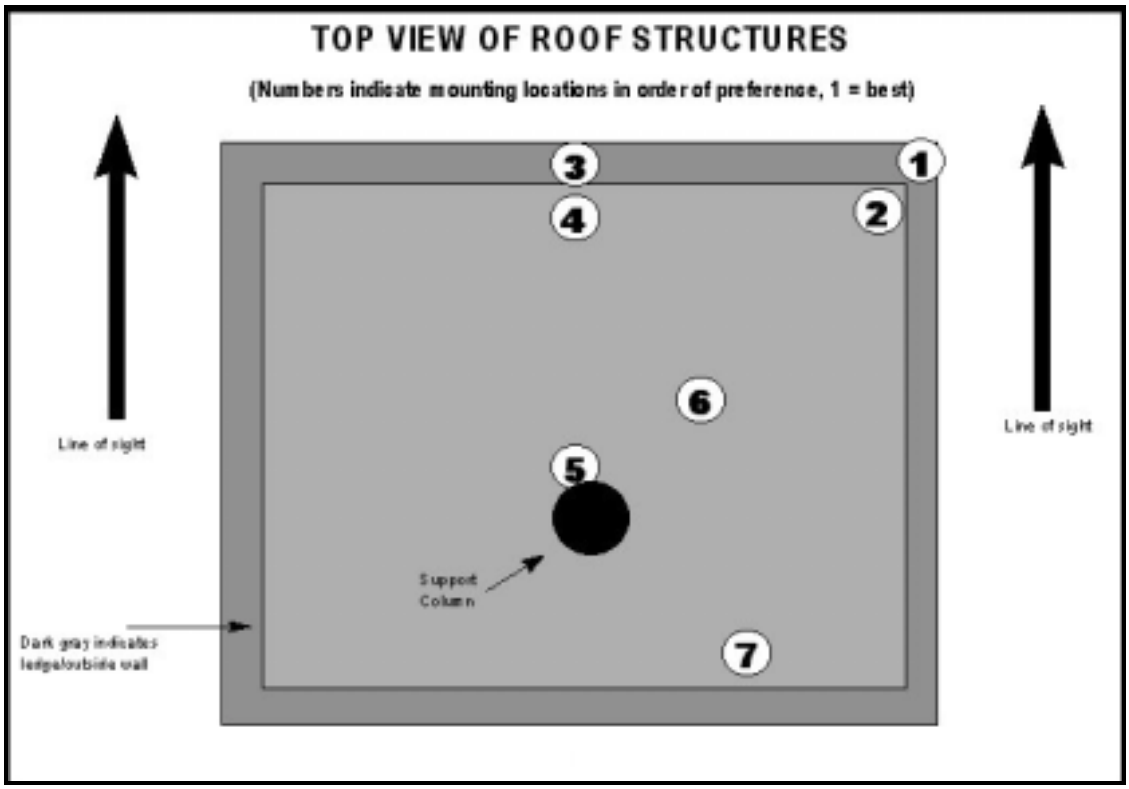

Figure 2.5: Mounting Locations in Order of Preference

Note: If the only option to mount the TereScope is at points 5, 6 or 7, it has to be mounted at least 2 m above the rooftop to overcome the roof scintillation and eventually have people crossing the link beam (If possible, avoid placing the TereScope on the mast).

3. Avoid surfaces with high reflectivity (e.g., white walls) behind the TereScope so as to reduce interference with the optical signal.
4. Get customer approval for the *exact* positions where the TereScopes will be mounted. Using paint, mark these positions.
5. Note the height that each TereScope will be above or aside the rooftop.
6. Identify the floor or wall type and dimensions of the location at which the TereScope is planned to be mounted.
7. For each TereScope unit, select one of the following mounting options[2] and record it.
    a. **Parapet/Ledge Mounting** (Figure 2.6) – This is a standard mounting option that uses only the Plate (JMP).
    b. **Wall Mounting** (Fig. 2.8) – This is a standard mounting option that uses the Plate (JMP) as well as the two Brackets (JMB).
    c. **Floor Pedestal Mounting** (Figure 2.7) – This is a non-standard mounting option that uses the Plate (JMP) as well as a Floor Pedestal (e.g., M015C).
    d. **Wall Pedestal Mounting** (Figure 2.9) – This is a non-standard mounting option that uses the Plate (JMP) as well as a Wall Pedestal (e.g., M054C).
    e. **Extended Wall Mounting** (Figure 2.10) – This is a non-standard mounting option that uses the Plate (JMP) as well as an Extended Wall (e.g., M062C).
    f. **Angle Bracket Mounting** (Figure 2.11) – This is a non-standard mounting option that uses the Plate (JMP) as well as an Angle Bracket (e.g., M001).

Figure 2.6: Parapet/Ledge Mounting (using JMP only)

Figure 2.7: Floor Pedestal Mounting (using JMP and MO15C)

Figure 2.8: Wall Mounting (using JMP and JMB)

Figure 2.9: Wall Pedestal Mounting (using JMP and MO54C)

[2] For more information on these mounting options, refer to *TereScope Installation Guide* (Publication No. 46366).

Figure 2.10: Extended Wall Mounting (using JMP and MO62C)

Figure 2.11: Angle Bracket Mounting (using JMP and M001)

Transmitting through a Window

1. Determine the number of surfaces the beam transits or is reflected from, the reflectivity of each surface, and condensation/precipitation collection areas.

2. Use the data below to determine whether the light beam attenuation is acceptable.

   4% attenuation for each surface of light reflection.

   15% attenuation for a double pane window.

   Attenuation due to tint in windowpane must be taken into consideration in choosing the right TereScope model. (The % attenuation depends on the tint and must be measured.)

3. Ensure that the angle of incidence[3] of the beam striking the windowpane is between 1º and 45º.

	Note On high buildings, for indoor window installation, the user should consider that occasionally the window-cleaning elevator might block the link beam.

Figure 2.12 shows the arrangement for transmitting through a window

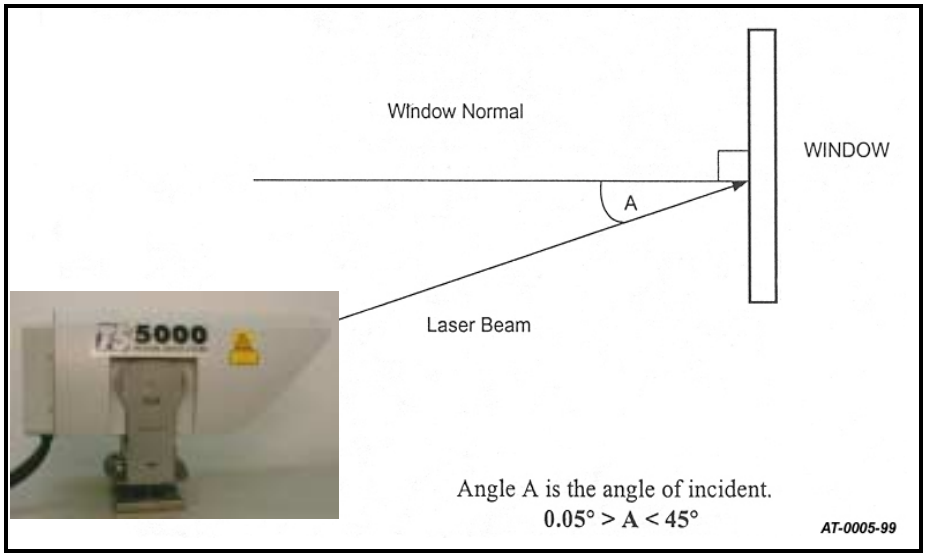

Figure 2.12: Arrangement for transmitting through a window.

[2]Angle which the light beam makes with the perpendicular to the windowpane

Chapter

3

Infrastructure

The only infrastructure required for operating the transceiver and linking the sites is Power and Data/Signal connection to the peripheral networking equipment. This must be ready prior to the airlink installation.

IN OUTDOOR INSTALLATIONS, USE SHIELDED AND WEATHERPROOF MATERIALS (CABLES, INLETS, AND CONNECTORS) COMPLIANT TO THE SAFETY STANDARD IN FORCE.

Power

Source

The power requirement for standard units is 100-240VAC @ 50/60Hz - 22W.

Note: Units requiring low Voltage : 24-60VDC - 20W can be factory set upon request.

It is recommended to use Surge Suppression System to avoid the damage to the equipment when power supply is unstable. Protection should be at least 25,000A min.

Cabling

Standard 3 conductors power cord are required. (See Safety requirements, Page iv)

Data/Signal Cabling

1. For TS5000/G, TS5000/G-F, TS5000/155 and TS5000/155-F

Type For connecting the Transceiver to the peripheral equipment two optical fiber cables are required (one for the transmission and one for the reception). The standard recommended cable is a 62.5/125 µm for MM fiber and 9/125 µm for SM fiber.

Connectors
Each fiber should be terminated with the ordered type of connector on the transceiver end (SC, ST….).

Optical Fiber testing.
The cabling installer must specify the attenuation of each fiber installed.

A simple power loss test can inform us about the condition of the fibers. This test consists of measuring with an optical power meter the output power at one end of the tested fiber as at the other end a fiber source is connected. If the values are in dBm, the difference between the input power and the output power gives the power attenuation of the fiber (in dB).

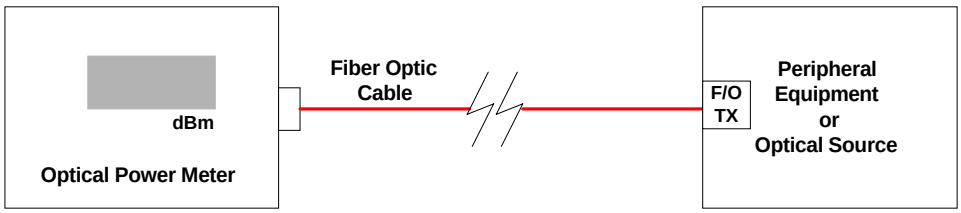

Figure 3.1: F/O cable test.

In case the above equipment is not available, a simple visual test may be performed to locate and reject badly damaged fibers. Place near one end of the fiber a light source and block alternatively the termination, you must observe the light coming out of the other end. (This procedure does not guarantee that a fiber is acceptable)

A standard 62.5µm fiber optic cable is characterised by an attenuation factor of around 3 to 5dB/km. Then a loss value of more than 3dB for runs up to 200m can indicate a suspect fiber.

Note

The fiber optic cables must be installed by a specialist.

HANDLE THE FIBERS VERY CAREFULLY.

2. For TS5000/ETH

Type

For connecting the Transceiver to the peripheral equipment a 2 pairs STP cable is required (one pair for the transmission and one for the reception). This cable must be a **straight** one when the peripheral has an MDI-X 10 Base T interface and a **Gross** one otherwise.

Connectors

The cable should be terminated with an RJ-45 connector on the Transceiver end.

3. For TS5000/4X1

Type: For connecting the Transceiver to the peripheral equipment a 2 pairs STP cable is required (one pair for the transmission and the other for the reception) for each E1 or T1 connection.

Connectors A special connector is provided by MRV to connect the twisted pair cables to the TS.

Chapter

4

Bench Test

It is always easier and more convenient to locate a failure and solve a problem in a lab on a bench than on a roof under bad conditions. It is then strongly recommended, as the circumstances allow it, to perform a bench test with all the modules prior to the installation in order to check the equipment compatibility and to validate the configuration.

See Unpacking Instructions in Appendix C.

1 - TS5000/G & TS5000/G-F

Compatibility

Peripheral equipment

Check the operating of the peripheral equipment connecting them through cables (see Configuration 1 below).

Interfaces

Check the specifications compatibility (type, wavelength, receiver range, output power, data rate) between the TereScope and the peripheral equipment interfaces.

Testing equipment

Chose an appropriate BER (Bit Error Rate) tester for checking the physical link quality. A portable one is preferred for convenient use in the field.

For example: A smartbit Giga Ethernet tester.

A ping test or a file transfer between two workstations - connected to the networking equipment - is useful and easy to implement for testing the performance of the whole configuration.

Setup

Dip-switch
Set all the DIP switch toggles to the OFF position for normal operation.

2 - TS5000/155 & TS5000/155-F

Compatibility

Peripheral equipment

Check the operating of the peripheral equipment connecting them through cables (see Configuration 1 below).

Interfaces

Check the specifications compatibility (type, wavelength, receiver range, output power, data rate) between the TereScope and the peripheral equipment interfaces.

Testing equipment

Chose an appropriate BER (Bit Error Rate) tester for checking the physical link quality. A portable one is preferred for convenient use in the field.

For example: the OC3port plus SONET and ATM analyser manufactured by Fluke.

A ping test or a file transfer between two workstations - connected to the networking equipment - is useful and easy to implement for testing the performance of the whole configuration.

Setup

Data Rate DIP Switch Toggle
According to the application in use, set the switch DS1 toggles as indicated in the following table:

Table 6: DIP Switch Setting for TereScope

Function	TS5000/155	
	OFF	*ON*
Fast Ethernet	1,2,3,4	–
ATM/OC3/STM1: 155 Mbps	2,3,4	1
SMPTE 143 Mbps	3,4	1,2
E3:34.368 Mbps	1,2,4	3
T3:44.736	2,4	1,3
OC1/STMO:51.840 Mbps	1,4	2,3
Customized 1	4	1,2,3
Customized 2	1,3,4	2
Open Protocol	1,2,3	4

Mode Select DIP switch toggle
Set DIP switch toggles 1, 2 and 4 to the OFF position for normal operation.

3 - TS5000/ETH

Compatibility

Peripheral equipment

Check the operating of the peripheral equipment connecting them through cables (see Configuration 1 below).

Interfaces

Check the specifications compatibility (type, data rate) between the TereScope and the peripheral equipment interfaces.

Testing equipment

Chose an appropriate BER (Bit Error Rate) tester for checking the physical link quality. A portable one is preferred for convenient use in the field.

A ping test or a file transfer between two workstations - connected to the networking equipment - is useful and easy to implement for testing the performance of the whole configuration.

Setup

Dip-switch
Set all the DIP switch toggles (other than 8 and 10 which are for SNMP management and Fusion) to the OFF position for normal operation.

4 - TS5000/4X1

Compatibility

Peripheral equipment

Check the operating of the peripheral equipment connecting them through cables (see Configuration 1 below).

Interfaces

Check the specifications compatibility (type, standard compliance) between the link and the peripheral equipment interfaces.

Testing equipment

Chose an appropriate BER (Bit Error Rate) tester for checking the physical link quality. A portable one is preferred for convenient use in the field.

Dip-switch Setup

- Main Dip-Switch: Set all the DIP switch toggles (other than 8 and 10 which are for SNMP management and Fusion) to the OFF position for normal operation.
- Dip switch under the port in use: - switches 3&4 OFF for normal operation.
  - Line coding (AMI or HDB3) – Toggle 1.
  - Receive Sensitivity (Short/Long Haul) – Toggle 2.
  - Impedance (75 ohm/120 ohm) – Toggle 5.

Test Configurations

IN ALL THE FOLLOWING CONFIGURATIONS TAKE CARE TO ADJUST THE TRANSCEIVERS OUT OF SATURATION, ALIGNING THEM SLIGHTLY IN AN ANGLE SO THAT THE DIGITAL READOUT SHOWS A READING LOWER THAN 1200 BUT HIGHER THAN 100.

Bench test

To learn more about TS Bench Test please refer to Appendix E.

Configuration 1: (Applicable without TereScope)

Peripheral equipment and cable testing

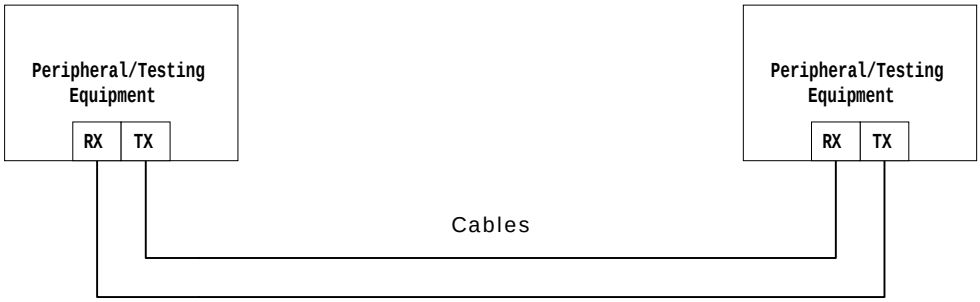

Configuration 2: (Applicable to all models)

One way Airlink BER test

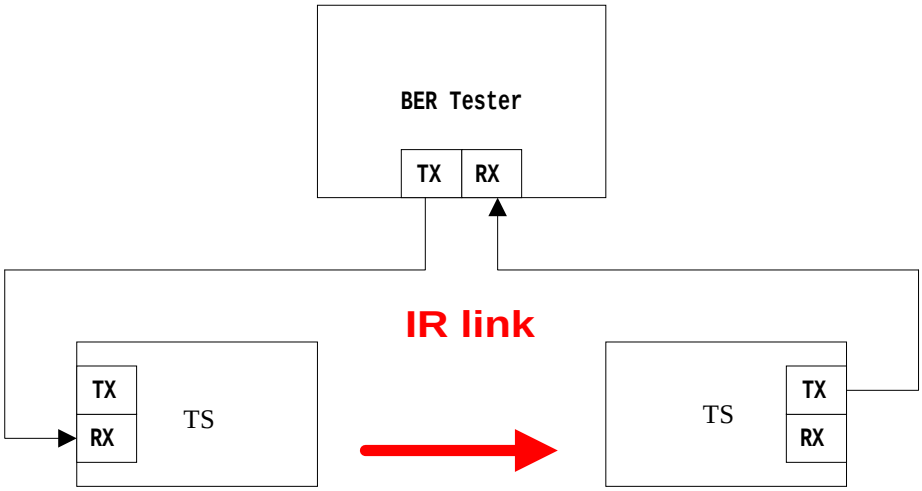

Configuration 3: (Applicable to all models)

Loop-back Airlink BER test

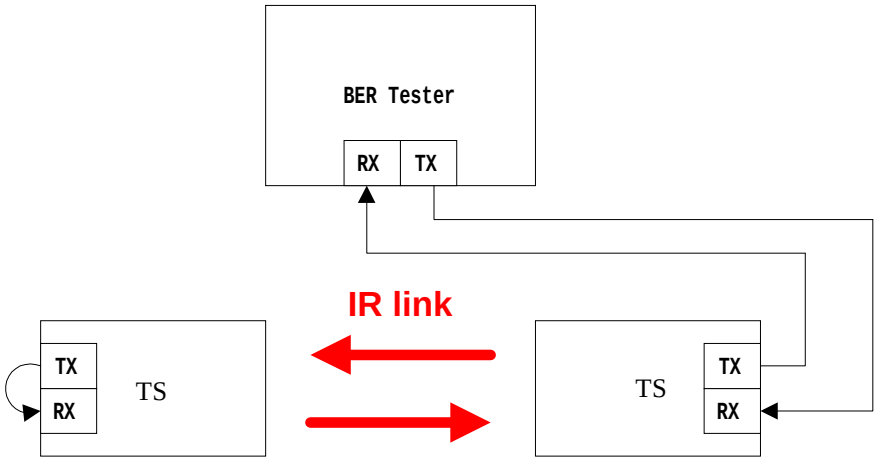

Configuration 4: (Applicable to models G, G-F, 155, 155-F, and ETH)

Whole configuration operating test (Ping test or File transfer) for Ethernet or Fast Ethernet systems

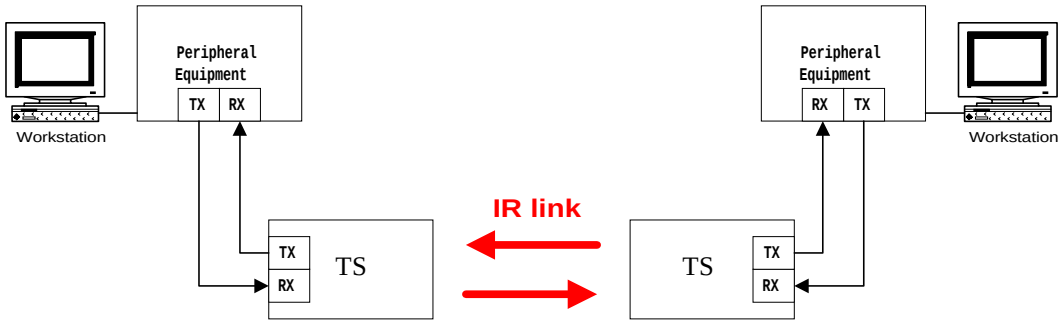

Configuration 5: (Applicable to all models)

Whole configuration operating test for all models

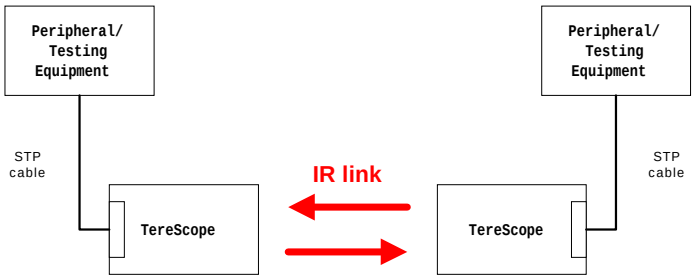

Display and Results

1. TS5000/G & TS5000/G-F

Proper Display

1. **Indicators**

Indicator →	AIR RX		F/O RX[1]		Management[2]		Align.	Loop	Fusion[3]	Heating[4]	SW Mode[5]	Lasers Status L1 to L3[6]
Position ↓	Flag	Sync	TX	RX	TX	RX						
ON	x	X										x
OFF			x	x	x	x	x	x	x	x	x	

Table 7: Indicators

Notes

1 - In case the tested TereScope has a Fusion option, the Leds of the redundant F/O should be switched off if the backup is inactive.

2 – TX LED Flashing when the RSM-SNMP is connected and the TereScope is transmitting management Data. (There is no Link indication)
RX LED Flashing when the RSM-SNMP is connected and the TereScope is receiving management Data. (There is no Link indication)

3 - This LED switches ON, when the fusion option is enabled. It starts blinking, when fusion is active, i.e. when the IR link stops operating and the back-up link becomes active.

4 - This LED switches ON only when there is a heating option. The heating is activated by moving the DIP Switch toggle # 5 to ON position.

5 - When the RSM-SNMP is connected and you choose to control the TereScope by software (Megavision), move the DIP Switch #10 to ON position and this LED will switch ON.

6 - L1 is OFF if Dipswitch toggle #3 is on ON position

2. **Received power**

100 < OPTICAL POWER < 1000

3. **Expected results**

The BER must be less than 10E-12 (10^{-12}) for on-going tests and error-free for short tests.

The PING test and file transfer procedure should not notify any *TIME OUT alarm* or last too long time compared to cabling connection.

2. TS5000/155 & TS5000/155-F

Proper Display

1. **Indicators**

Indicator →	AIR RX		F/O RX[1]		Management[2]		Align.	Loop	Fusion[3]	Heating[4]	SW Mode[5]	Lasers Status L1 to L3
Position ↓	Flag	Sync	TX	RX	TX	RX						
ON	x	X										x
OFF			x	x	x	x	x	x	x	x	x	

Table 8: Indicators

Notes

1 - In case the tested TereScope has a Fusion option, the Leds of the redundant F/O should be switched off if the backup is inactive.

2 – TX LED Flashing when the RSM-SNMP is connected and the TereScope is transmitting management Data. (There is no Link indication)
RX LED Flashing when the RSM-SNMP is connected and the TereScope is receiving management Data. (There is no Link indication)

3 - This LED switches ON, when the fusion option is enabled. It starts blinking, when fusion is active, i.e. when the IR link stops operating and the back-up link becomes active.

4 - This LED switches ON only when there is a heating option. The heating is activated by moving the DIP Switch toggle # 5 to ON position.

5 - When the RSM-SNMP is connected and you choose to control the TereScope by software (Megavision), move the DIP Switch #10 to ON position and this LED will switch ON.

2. **Received power**

100 < OPTICAL POWER < 1000

3. **Expected Results**

The BER must be less than 10E-12 (10^{-12}) for on-going tests and error-free for short tests.

The PING test and file transfer procedure should not notify any *TIME OUT alarm* or last too long time compared to cabling connection.

3. TS5000/ETH

Proper Display

1. Indicators

Indicator → Position ↓	AIR RX		10 Base-T		Lasers Status L1 to L3
	Link	Data	Link	Data	
ON	x		x		x
OFF					
Blinking		x		x	

Table 9: Indicators

2. **Received power**

100 < OPTICAL POWER < 1000

3. **Expected Results**

The BER must be less than 1E-9 for lasting tests and display *NO ERRORS* for brief ones.

The PING test and file transfer procedure should not notify any *TIME OUT alarm* or last too long time compared to cabling connection.

4. TS5000/4X1

Proper Display

1. Indicators

Indicator → Position ↓	AIR RX		Tributary Channels A to D	Lasers Status L1 to L3
	Link	Sync		
ON	x	x	x (for the connected port)	x
OFF			x (for the not connected port)	

Table 10: Indicators

2. **Received power**

100 < OPTICAL POWER < 1000

3. **Expected Results**

The BER must be less than 1E-9 for lasting tests and display *NO ERRORS* for brief ones.

Note: When placing the two TS5000 face to face you need to do:

1. Cover with a tape two of the three transmitters, leaving only one transmitter free. Recommended distance for bench test is between 1.5 to 2m' apart.

2. Before doing the BER test you have to verify that there are no "reflections" from the front window: Shut down the power from unit A and make sure that the RSSI value on unit B drops to "000" or to the levels that the "Air RX" LED is OFF. Do the same shutting down unit B. if you have RSSI reading when shutting down one of the units, you need to fine align it until you get RSSI value of "000" or the "Air RX" LED to OFF position.

3. Only when part 1 & 2 are done you can start the BER test of file transfer test.

Chapter

5

Installation

This chapter deals with the mounting of the hardware and the unit on the site (see Appendix D for the required material).

See Unpacking Instructions in Appendix C.

<u>CAUTION</u>: Unit to be mounted in horizontal position only. Max angle 45º

Accessories

The standard mounting accessories are supplied with the transceiver in a kit. They are designed for typical mounting on horizontal and vertical surfaces.

Description

The accessories kit (supplied by MRV) consists of :

- The Mounting Plate (JMP-8)
- The Alignment Device (AD-5000)
- The Installer Tool Kit (JITK-8)

The JMP-8 is used for mounting the transceiver on the support surface. (i.e. to a horizontal concrete surface/plate only) the JMP-8 is not fit to the MRV standard mounting brackets, if needed to mount it on MRV standard mounting brackets, attach the AD5000 base plate directly to the mounting bracket top plate without the JMP-8

The AD-5000 allows the aiming of the two units making the link (see chapter 6)

JMP-8
Mounting Plate
(dimensions in mm)

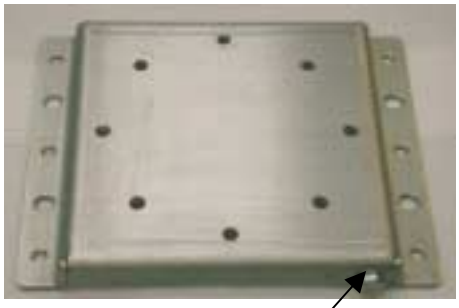

Figure 5.1a: JMP-8

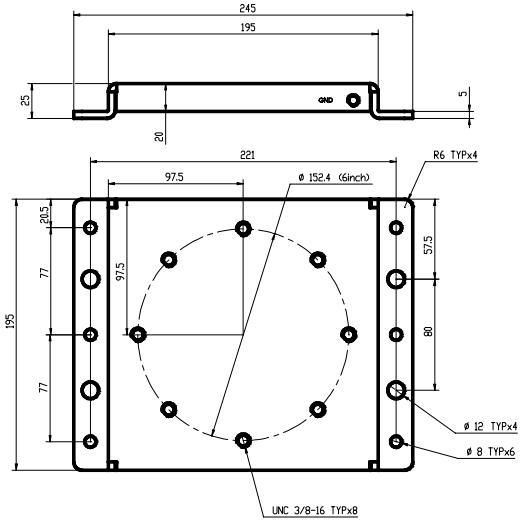

Dimensions in mm

Figure 5.1b: JMP-8

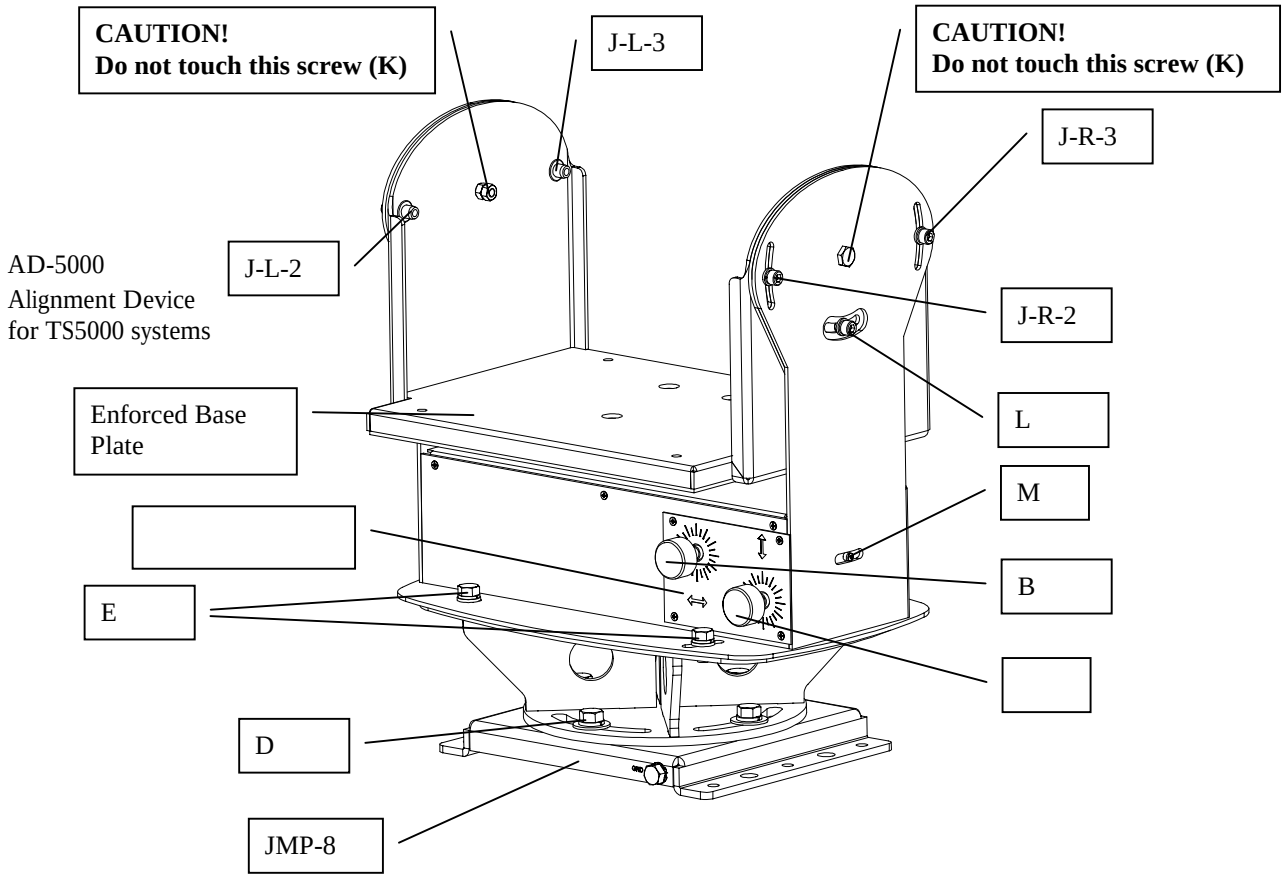

Fig. 5.2: Alignment device (AD-5000) + JMP-8

Fig. 5.3: Back

Fig. 5.4: Front

Fig. 5.5: Right

Fig. 5.6: Left

B Right-Left fine alignment knob
C Up-Down fine alignment knob
D Locking screws between AD-5000 & JMP-8
E Horizontal aiming locking screws
J-R Vertical Aiming locking screws (Right side)
J-L Vertical Aiming locking screws (Left side)
K Vertical aiming axis
L Coarse alignment screw
M Red reference point

Alignment Knobs

The Fine Alignment mechanism of the TS5000 is fragile and must therefore be handled gently. On the AD-5000 and under the alignment knobs are scales that aid the installer in easily and quickly performing optimal alignment. Each full turn of a knob rotates the head of the TS5000 by an angle of 2.15 mrad. Accordingly, a turn equal to a turn from one number to the next rotates the head by 0.18 mrad, and a turn equal to a turn from marking to the next rotates the head by 0.09 mrad.

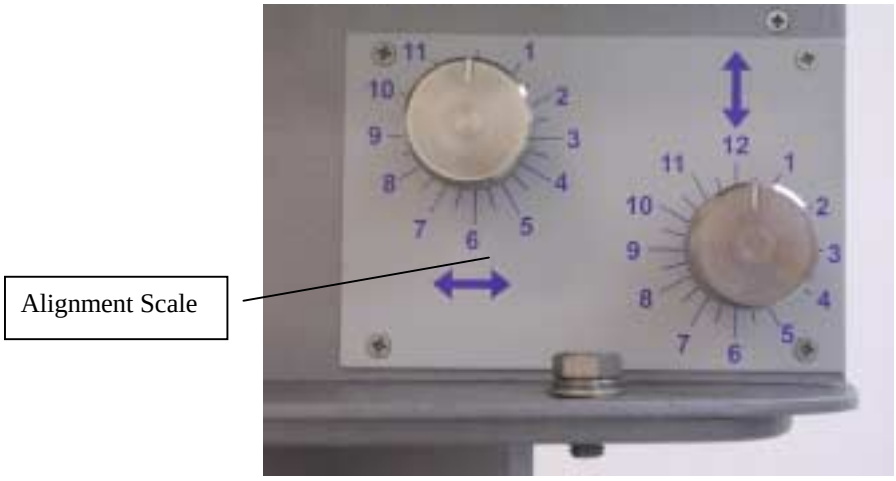

Fig. 5.7: View on Alignment Knobs

The Installer Tool Kit (JITK-8)

JITK: Installer Tool Kit

The JITK-8 tool kit includes the work tools required for opening and closing nuts and screws of the TS5000 for optimal installation. It is recommended that these tools be used. MRV supplies this tool kit with each TS5000 head. In addition to the tool kit, screws are supplied for mounting the JMP-8 and AD-5000 on a pedestal that is supplied by MRV as an option.

Fig. 5.8: JITK: Installer Tool Kit

Mounting

1- Accessories

- Horizontal surfaces (parapet, ...):

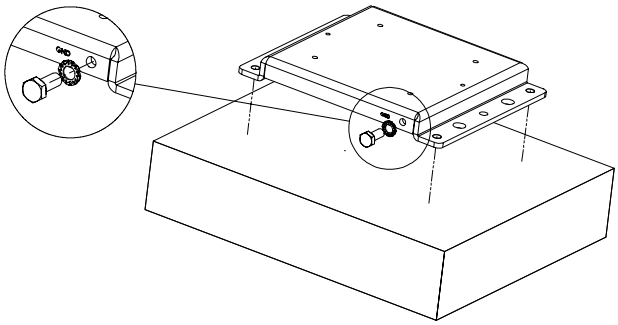

Figure 5.9: JMP on the fixation surface

THE JMP SHOULD BE ORIENTED IN SUCH A WAY THAT THE GROUNDING SCREW IS LOCATED ON THE BACK (CLOSE TO THE INSTALLER) AND THE FRONT IS FACING THE OPPOSITE SITE.

2- Attachment of the Transceiver (TS)

In order to place the Transceiver in the right place on the swing base, direct and insert four screw heads from the bottom of the box to three bigger holes on the swing base

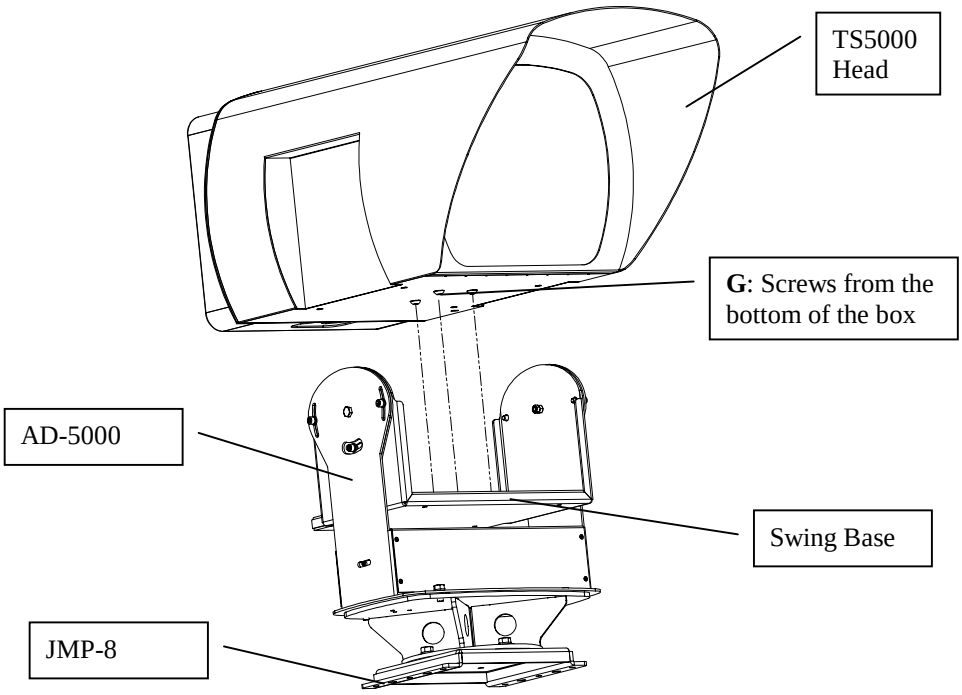

Fig. 5.10: Mounting TS5000 on Alignment Device

Screw 4 screws (¼” x ½” length) with the spring washers to fix the transceiver on the swing base. These 4 screws should be locked tightly with the help of appropriate tools.

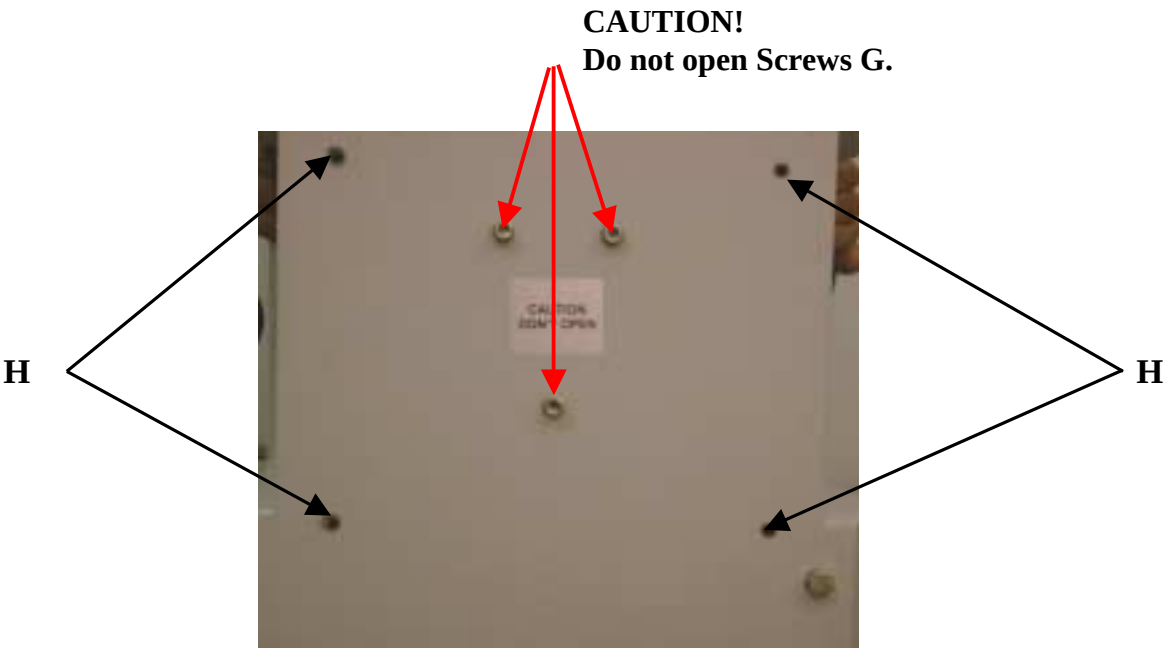

Fig. 5.11a: Bottom view: Locking screws (H) between TS and alignment device

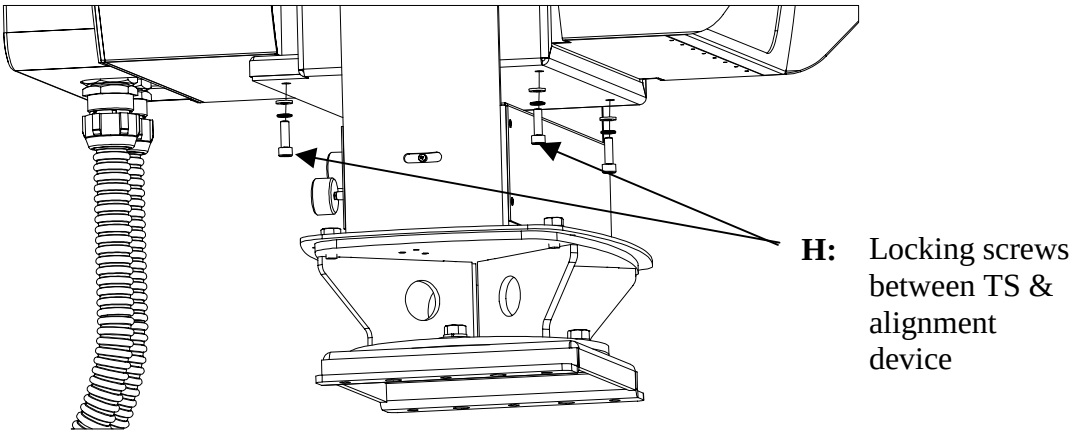

Fig. 5.11b: Locking the screws between TS and alignment device

Particular Figure Cases/Techniques

Mounting on the floor

In some cases the only place where the installation is acceptable, possible or authorized is on the floor (for example on a roof without any parapet or if the parapet is metallic ...). In such situations drilling holes on the floor is out of the question.

The principle consists in fixing in a very stable way a tower standing on the floor. The transceiver will be attached on the top of the tower.

Two techniques using a small concrete block are suggested for stabilizing the tower on the floor.

- The concrete slab is directly poured on the basis of the tower
- Four bolts are inserted in the concrete slab placed on the floor. The tower mount is fixed on the slab with the inserted bolts using nuts.

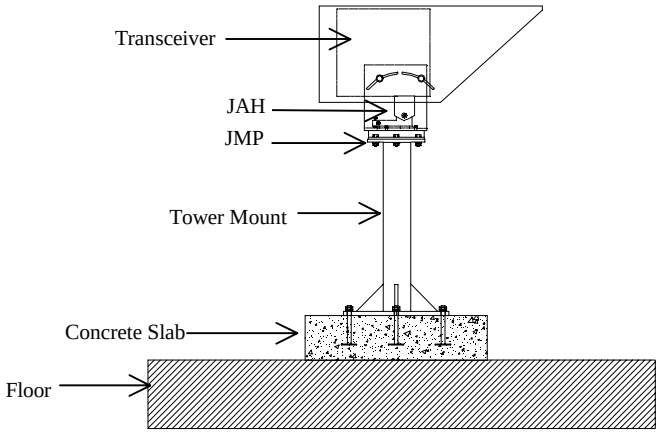

Figure 5.12: Mounting on a concrete slab

TAKE CARE TO REMOVE ANY INTERVENING SOFT MATERIAL, SUCH AS ASPHALT, BETWEEN THE SLAB/TOWER BASIS AND THE FLOOR. ONCE THE INSTALLATION IS COMPLETED RESTORE THE ROOF WATER-TIGHTNESS WITH A SEALING MATERIAL AROUND THE SLAB.

Chapter

6

Aiming Procedure

Point to point connections require the orientation face to face of both "transceiving" ends of the link. Concerning wireless optical links this should be done as accurate as possible for positioning the beam symmetrically all around the remote receiver.

Powering on the TereScope

1 – Make sure that the power cable is disconnected from the electrical power source.
2 – Remove the Back Door by undoing the four screws I (two on each side – see Figure 6.1.)

Fig. 6.1: Screws I

3 – Connect the wires of the power cable (see Figure 6.2) to the Terminal Block (see Figure 6.3) paying attention to L=Line. G=Ground & N=Neutral.

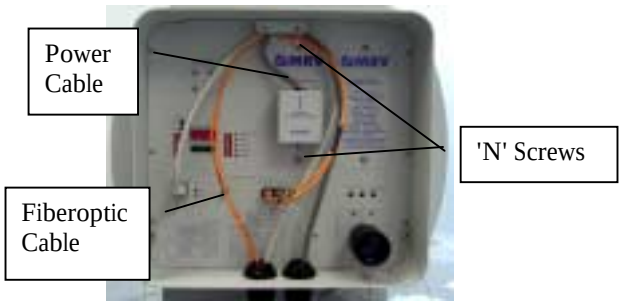

Fig. 6.2: Power cable Fiberoptic cable, and 'N' Screws

Fig. 6.3: Power cable & Terminal block

4 – After connecting the power cables to corresponding sockets, tightly close the screws of the Terminal block – see Figure 6.4. Gently jerk the cable to check that it stays connected. Cover the Terminal Block with plastic cover (if available).

Fig. 6.4: Power Terminal Block Locked

5 – Cover the Terminal Block with the power supply cover.

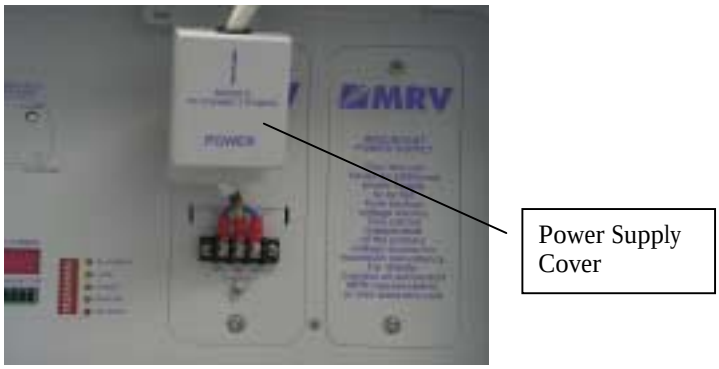

Fig. 6.5: Power Supply Cover

6 – Connect the power cable to the electrical power source to power on the TereScope.

Transceiver Alignment

Successful installation of the TereScope depends primarily on precise and accurate optical alignment. **Carefully follow the instructions below!!!**

Important: Handle the Telescope with great care since it is the main tool for fine alignment.

Turn on the power to the TS5000 heads from the power source.

Models G and G-F: Set DIP switch toggles 1,2 to the "Alignment" position (indicated on the back panel).

Models 155 and 155-F: Set DIP switch toggles 1,2 to the "Alignment" position (indicated on the back panel).

Models ETH and 4X1: Even if the data port is left unconnected, the TS5000 transmits an Idle Signal which can be used to perform alignment.

The transceiver alignment procedure is implemented in two stages:

- **Coarse Alignment**
- **Fine Alignment**

Action	Screws Position	Description	Notes
1. ***Coarse Alignment***	All the screws are open (**J, L, E, D**) 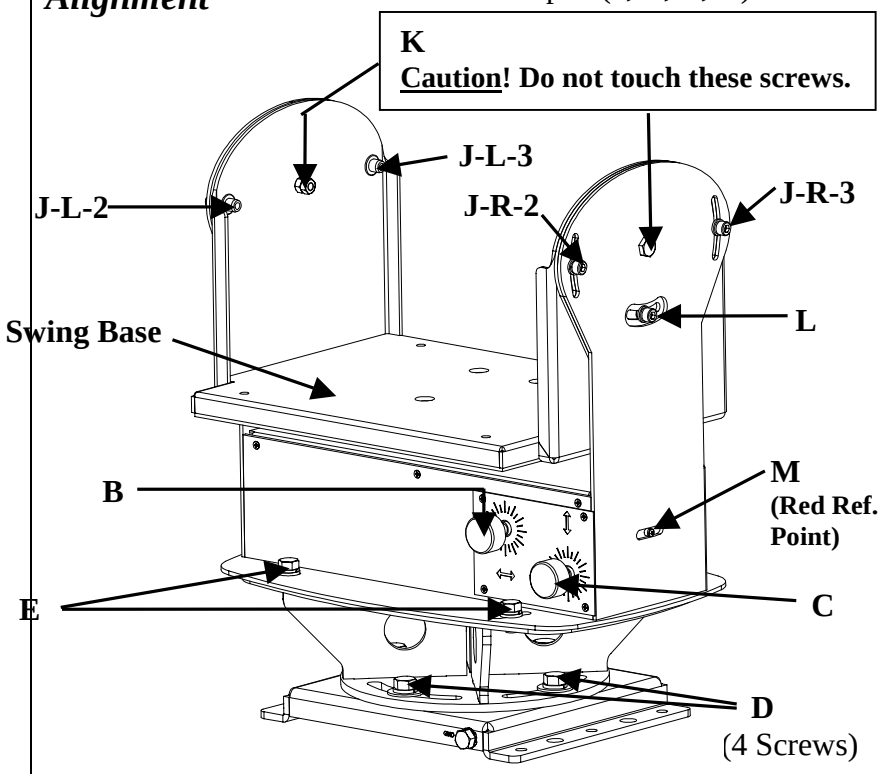 **Fig 6.6: JMP-8 and AD-5000** **Note:** Knobs B and C are in the back of the TS5000.	Rotate the transceiver left and right, up and down holding it by the box and looking through the telescope till you can see the opposite site. If the **D** screws prevent further rotation, screws **D** can be reassembled in the nearby holes. If it is difficult to see the opposite site due to the distance or haze, make sure at this stage that the transceiver is powered on and then rotate the transceiver to the right and to the left, up and down, moving it slowly till the receipt of a certain DVM reading (minimum 20-30).	Before starting coarse alignment ensure the following: 1) Screws **E** are positioned in the middle of the slots. This can be done by turning knob B. 2) The Red Ref. point **M** is positioned so that its distance from the movement range end closer to the front panel is about 1/3 the total movement range. This can be done by turning knob C. 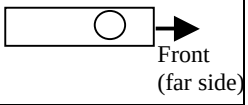
Finishing coarse alignment	**Screws D & L are closed.**	Tighten screws **D** & **L**.	
CAUTION! Do not turn alignment knobs B and C when the fine horizontal aiming screws E and the coarse vertical aiming screws J and L are locked since this may damage the fine alignment mechanism.			

2. Fine Alignment	**E, J** – opened**.** **L,D -** closed	1) Open screws **J-L-1**, **J-L-2**, and **J-L-3** 1 to 2 turns**.** 2) Tighten screws **J-R-1**, **J-R-2**, and **J-R-3** till they are open for ¾ turns; i.e. slightly tightened, but allow for fine alignment. 3) Do the alignment with the help of the alignment knobs **B** & **C** to place the opposite Tranceiver exactly in the center of the target of the telescope till receipt of the signal on RSSI meter. 4) Perform the fine alignment procedure given in the section Fine Alignment on page 48.	
3. Tightening the Screws		1) Tighten screws **E**. 2) Tighten screws **J-R-2** and **J-R-3** (2 screws). 3) Tighten screws **J-L-2**, **J-L-3**, and **J-L-1** (3 screws) ***in this order***.	
4. Finishing the Alignment	All screws are closed.	To put down alignment results – link distance; -weather condition; -visibility; -RSSI at both sites.	

Link Operating Test

Set back the Mode Select Dip-Switch on the Normal position (the Alignment indicator should switch OFF).

Connect on both sites with fiberoptic or STP cables coming from the peripheral equipment to the fiberoptic or copper port of the transceiver.

IT IS A CROSS CONNECTION:

TX ➔RX AND RX ➔ TX

The F/O RX Flag and Sync. Indicators should switch ON as soon as the peripheral equipment is powered ON.

In the ETH model, the 10Base-T flag must turn ON and as soon as data traffic is present, both DATA LEDs must blink.

In the 4X1 model, the LED of a port must turn ON as soon as data traffic is present on the port.

A BER test is recommended. In case this is not possible check at least with the customer/user the performances of the whole link (see the chapter Bench Test).

Installation Log

Write down all the information about the installation (including digital readout and the setup of the transceivers) in an installation log. This information could be a valuable reference for future maintenance or troubleshooting visits.

An installation form is proposed as an example in Appendix H.

Before Closing the Rear Door

1) Ensure that the Power Supply Cover is fastened in place.
2) All cables are properly held in position.

Visual Inspection

Visually check that all parts and cables are connected.

Fine Alignment

- **This stage requires one person on each site.**
- **Provide yourself with a walkie-talkie, a mobile phone or any other equipment giving you a way to talk to the assistant working on the opposite site.**

The target at this stage is to aim **only the local transmitter**, using the Fine Tuning the 2 knobs B and C, so that the **remote receiver** will be positioned in the middle of the beam cross section at the shot distance.

Front view
Transceiver at the middle of the beam cross section

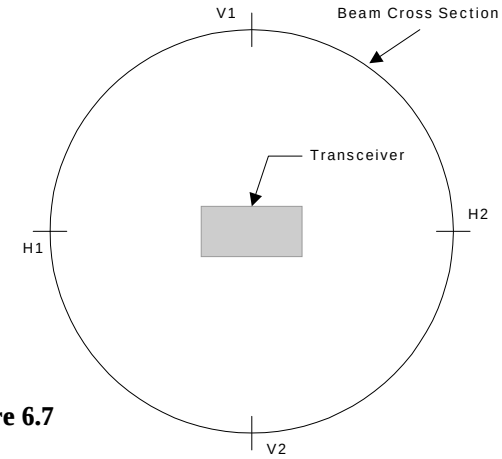

Figure 6.7

Procedure:

1. Find the horizontal and vertical Beam edges (H1, H2, V1, V2) by obtaining a reading between 200 and 300 on the 7-segment display.

2. Set successively the remote transceiver in the middle of the two segments [H1,H2] and [V1,V2].

Position at the beginning (after the coarse alignment)

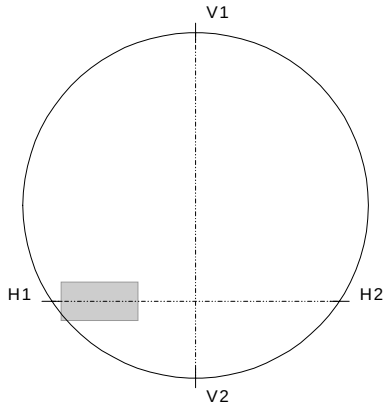

Figure 6.8

Important: Do **not** in all cases select the head position for which the DVM reading is maximum! The best position of alignment is the beam center.

To determine the horizontal beam edges H1 and H2, move slowly left and right the local transceiver until the digital readout on the remote unit becomes 200. Locate these two points relating to reference points on the opposite site looking through the telescope. Set the remote transceiver - moving the local transceiver - at the middle of these two reference points.

Position after the horizontal aiming

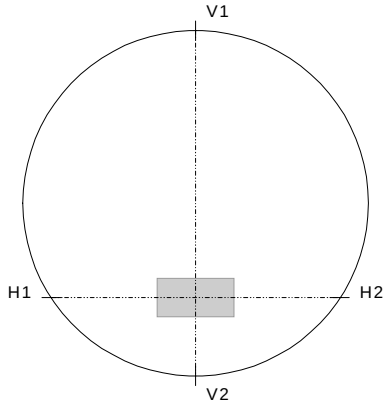

Figure 6.9

Repeat this process for the vertical positioning (middle of segment [V1,V2]).

Final position after the vertical aiming

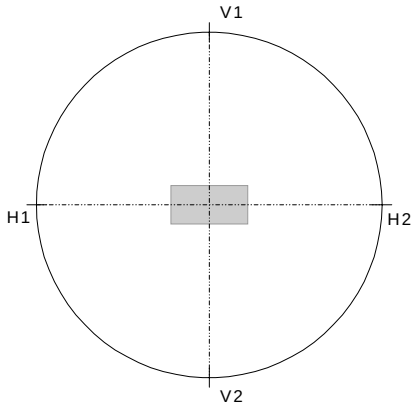

Figure 6.10

Once the position is reached, firmly tighten the screws as described in Step 3 of the the section Transceiver Alignment on page 46.

Repeat this procedure exchanging roles with the assistant on the opposite site (i.e. he will move the remote transceiver and you will report to him the digital readout on the local one).

At the end of the process the digital readout should be approximately the same on both units (see Appendix B for expected readings).

For short distances below or close to the minimum distance specified for each model (see section Technical Specifications), pay attention that the digital readout does not exceed 1200.

Installation Completion

Check that the heads appear as shown in the photographs below.

Fig. 6.11: Mounted TS5000 – Right View

Fig. 6.12: Mounted TS5000 – Left View

Fig. 6.13: Mounted TS5000 – Back View

Chapter

7

Maintenance

Periodic Visits

Periodic visits (every three/six months depending on the installation environment) should be planned for:

- Checking the display
- Checking the mounting
- Cleaning the optical aperture of the transceivers
- Cleaning the building windows for indoors installations.

At cleaning time, the reading of the digital readout should be marked down in a service log book. Once the optical aperture is cleaned, if the reading is substantially lower than that noted at installation time, the aiming accuracy should be examined and restored if necessary.

Note

Aiming accuracy should be checked looking through the telescope and comparing the present scene sighting to the one sketched in the Installation Log at installation time.

APPENDIX A Product Specifications

TS5000 / G

Part Number		TS5000/G or TS5000/G-F	
Application / Data Protocol		622mbps, Fiber channel, Giga-Ethernet and others	
Performance	Rate	100-1500 Mbps	
		Not attenuated (3 TXs)	**Attenuated (2 TXs)**
	Range @ 3dB/km	3500 m	3100 m
	@ 5dB/km	2750 m	2500 m
	@ 10dB/km	1850 m	1650 m
	@ 17dB/km	1300 m	1200 m
	@ 30dB/km	870 m	820 m
	Minimum Range	700 m	500 m
	Bit Error Rate	Less than 1E-12 (unfaded)	
	MTBF	10 years	
Transmitter	Light source	3 x Lasers	
	Wavelength	830-860 nm	
	Total Output power	70 - 140 mW	
	Beam divergence	2 mrad	
Receiver	Detector	APD	
	Field of view	2 mrad	
	Sensitivity	-33 dBm	
Interface	Type	Fiber Optic Transceiver - Multimode (Singlemode available)	
	Connectors	SC (other connectors available)	
	Wavelength	850 nm (other wavelength available)	
	Output power	-4 to -9.5 dBm	
	Receiver Oper. range	0 to –17 dBm	
Power Supply		Factory set: 100-240 VAC @ 50/60 Hz or 35-60 VDC (30 W)	
Environmental Information	Operating Temp.	-30 °C to +60 °C	
	Storage Temp.	-50 °C to +70 °C	
	Humidity	95% non-condensing	
	Housing	Weatherproof – IP 66	
	Eye safety Class	1M	
Mechanical Design	Dimensions [mm]	790 X 390 X 556	
	Weight – Unit	18 kg	
	Weight – Accessories	20 Kg	
	Modularity	Modular Power supply, Modular Interface, Redundant Power supply - optional	
Diagnostics Indicators and	Indicators	Airlink: Flag, Sync. Fiber Optic: Flag, Sync. Alignment, Loopback, Fusion: Enabled/Active, Heating status (if exists), Control mode: Hardware mode or softeware mode. Power supply status, Heating active, Receive Signal Strength (Digital Display), Lasers status (3 LEDs)	
Selectors	Selectors	Alignment, Loopback (local), RLB, Laser status, Fusion activation, Heating activation (if exists), IP address setup, Control mode.	
	Dry Contact	Two pairs of Pins of the management RJ45 connector can be used for dry contact purposes, for Airlink flag and F/O flag alarms	
	Management	SNMP Protocol – Built-in	

TS5000/155 and TS5000/155-F

Part Number		TS5000/155 or TS5000/155-F
Application / Data Protocol		Fast Ethernet, ATM, OC3,STM1, SMPTE, E3, T3, OC1/STM0 & Open Protocol
Performance	Rate	1-155 Mbps
	Range @ 3dB/km	5200 m
	@ 5dB/km	4000 m
	@ 10dB/km	2540 m
	@ 17dB/km	1760 m
	@ 30dB/km	1150 m
	Minimum Range	600 m
	Bit Error Rate	Less than 1E-12 (unfaded)
	MTBF	10 years
Transmitter	Light source	3 x Lasers
	Wavelength	830-860 nm
	Total Output power	85 mW
	Beam divergence	2 mrad
Receiver	Detector	APD
	Field of view	2 mrad
	Sensitivity	-46 dBm
Interface	Type	Fiber Optic Transceiver - Multimode (Singlemode available upon request)
	Connectors	SC (other connectors available)
	Wavelength	1310 nm (other wavelength available)
	Output power	-17 ± 3 dBm
	Receiver operating range	-14 to –30 dBm
Power Supply		Factory set: 100-240 VAC @ 50/60 Hz or 35-60 VDC (22 W)
Environmental Information	Operating Temp.	-30 °C to +60 °C
	Storage Temp.	-50 °C to +70 °C
	Humidity	95% non-condensing
	Housing	Weatherproof – IP 66
	Eye safety Class	1M
Mechanical Design	Dimensions [mm]	790 X 390 X 556 (AD-5000: 250x353x432)
	Weight – Unit	18 kg
	Weight – Accessories	20 kg
	Modularity	Modular Power supply, Modular Interface, Redundant Power supply - optional
Diagnostics Indicators and Selectors	Indicators	Airlink: Flag, Sync. Fiber Optic: Flag, Sync. Alignment, Loopback, Fusion: Enabled/Active, Heating status (if exists), Control mode: Hardware mode or softeware mode. Power supply status, Heating active, Receive Signal Strength (Digital Display), Lasers status (3 LEDs)
	Selectors	Data Rate, Alignment, Loopback (local), RLB, Laser status, Fusion activation, Heating activation (if exists), IP address setup, Control mode.
	Dry Contact	Two pairs of Pins of the management RJ45 connector can be used for dry contact purposes, for Airlink flag and F/O flag alarms
	Management	SNMP Protocol – Built-in

TS5000/ETH

Part Number		TS5000/ETH
Application / Data Protocol		Ethernet (10 Mbps)
Performance	Rate	10Mbps
	Range [1] @ 3dB/km	6700 m
	@ 5dB/km	5000 m
	@ 10dB/km	3100 m
	@ 17dB/km	2150 m
	@ 30dB/km	1380 m
	Minimum Range	1000 m
	Bit Error Rate	Less than 1E-9 (unfaded)
	MTBF	10 years
Transmitter	Light source	3 x Lasers
	Wavelength	830-860 nm
	Total Output power	80 mW
	Beam divergence	2 mrad
Receiver	Detector	Silicon Photodiode
	Field of view	5 mrad
	Sensitivity	-55 dBm
Interface	Type	Copper 10BaseT
	Connectors	RJ45
	Cable	STP
Power Supply		Factory set: 100-240 VAC @ 50/60 Hz or 24-60 VDC (22 W)
Environmental Information	Operating Temp.	-30 °C to +50 °C
	Storage Temp.	-50 °C to +70 °C
	Humidity	95% non-condensing
	Housing	Weatherproof – IP 66
	Eye safety Class	1M
Mechanical Design	Dimensions [mm]	822 X 384 X 526
	Weight – Unit	9 kg
	Weight – Accessories	18 kg
Diagnostics Indicators /	Indicators	**Airlink**: Flag, Data. **10Base-T**: Flag, Data.
		Receive Signal Strength (Digital Display), Lasers status (3 LEDs)
	Dry Contact	One pair of Pins of the main RJ45 connector can be used for dry contact purposes, for Airlink flag alarm
	Management	SNMP Protocol – Built-in

TS5000 / 4X1

Part Number			TS5000/4E1 & TS5000/4T1
Application / Data Protocol			4E1: 4x2.18Mbps or 4T1: 4x1.55Mbps G.703/G.704
Performance	Range @ 3dB/km		6700 m
	@ 5dB/km		5000 m
	@ 10dB/km		3100 m
	@ 17dB/km		2150 m
	@ 30dB/km		1380 m
	Minimum Range		1000 m
	Bit Error Rate		Less than 1E-9 (unfaded)
	MTBF		10 years
Transmitter	Light source		3 x Lasers
	Wavelength		830-860 nm
	Total Output power		80 mW
	Beam divergence		2 mrad
Receiver	Detector		Silicon Photodiode
	Field of view		5 mrad
	Sensitivity		-55 dBm
Interface	Type		E1: 75 Ohm or 120 Ohm, T1: 100 Ohm
	Connectors		Universal Connector
	Cable		STP or Coax
Power Supply			Factory set: 100-240 VAC @ 50/60 Hz or 24-60 VDC (22 W)
Environmental Information	Operating Temp.		-30 °C to +50 °C
	Storage Temp.		-50 °C to +70 °C
	Humidity		95% non-condensing
	Housing		Weatherproof – IP 66
	Eye safety Class		1M
Mechanical Design	Dimensions [mm]		822 X 384 X 526
	Weight	Unit	9 kg
		Accessories	18 kg
Diagnostics Indicators /	Indicators		**Airlink**: Flag, Sync. **Port**: LED per port.
			Receive Signal Strength (Digital Display), Lasers status (3 LEDs)
	Management		SNMP Protocol – Built-in
	Dry Contact		6 Dry Contact outputs: 4 for interface ports 1 for air-link flag 1 for air-link sync

APPENDIX B

Digital Readout vs. Distance

These tables are only intended to give you an idea of what digital readout you could expect according to the distance to link.

D= Distance [m]

R= Reading (Digital readout)

TS5000/G and TS5000/G-F

D	400	500	600	700	800	900	1000	1100	1200	1400	1500
R	1100	950	820	700	780	700	620	560	500	440	380

D	1600	1800	2000	2200	2400	2600	2800	3000	3500	4000
R	360	280	240	220	180	160	135	125	95	75

TS5000/155 and TS5000/155-F
Rev 3.0 and less

D	2200	2400	2600	2800	3000	3500	4000	5000
R	790	780	760	750	740	720	680	580

D	600	800	1000	1200	1400	1600	1800	2000
R	1050	1000	940	880	840	830	810	800

TS5000/155 and TS5000/155-F

D	400	500	600	700	800	900	1000	1100	1200	1400	1500	1600	1800	2000
R	1270	1250	1070	1020	990	970	950	940	930	920	910	890	840	780

D	2200	2400	2600	2800	3000	3500	4000	4300	4600	5000	5300	5600	6000
R	730	680	650	630	570	530	490	465	450	440	420	410	390

TS5000/ETH and TS5000/4X1

D	400	500	600	700	800	900	1000	1100	1200	1400	1500	1600	1800	2000
R	1220	1220	1150	1040	990	920	870	850	800	720	710	705	700	670

D	2200	2400	2600	2800	3000	3500	4000	4300	4600	5000	5300	5600	6000
R	630	590	570	540	510	470	430	410	390	360	350	330	320

Actual reading may be greater or up to 15% lower.

Even when there is no transmission from the opposite side, the digital readout of TS5000 can show a certain reading: up to 5-6 in laboratory and up to 20 outside.

APPENDIX C Unpacking Instructions for TS4000/5000

The JMP-8 is shipped assembled to the AD-5000, inside the accessories packing box. It must be dismantled prior to installation.

1. Unpack all the accessories.
2. Loosen completely the four 'D' (M8 hex. screws, using wrench #13 and take the AD-5000 off the base JMP-8 (Save the screws for later use). Do not attempt to loosen or tighten any screws on the AD-5000 other than those specified in this manual.

The packing box contains:

- Big box with one Transceiver TS4000/5000
- Smaller box with accessories:
  - AD-5000 & SMP-8
  - JITK – Installer tools kit and screws
  - CD manuals
  - Flexible ducts x 2
  - Flange x 2

'D' Screws
(Two in front, two behind)

Fig C.1: The Four 'D' Screws

KEEP IN SECURE PLACE ALL THE BOLTS AND SCREWS. YOU WILL NEED THEM FOR THE INSTALLATION.

APPENDIX D Tool Kit, Equipment and Materials

TOOLS

1. Electric drill (impact for masonry), reversible, with speed control and 0-13mm chuck
2. Drills set High Speed Steel (HSS) 3-13mm.
3. Concrete carbide .bit drills 6,8,9 and 10mm (regular and long shank).
4. Adjustable (crescent) wrench 6”, 10”.
5. Open-ring wrenches (spanners), standard and metric.
6. Vice grip pliers 10-12”
7. Cutter, long nose pliers, electrician’s pliers (insulated).
8. Pen, Pencil, Permanent markers.
9. Lens cleaning clothes.
10. Screwdrivers (flat and Philips), sizes 1, 2, 3 + power screwdriver bits.
11. 50m extension cable + 3 outlet multiple electrical tap
12. 200g hammer.
13. Blade knife.
14. Ratchet handle driver.
15. Socket wrenches 8mm, 10mm, 11mm, 13mm, 14mm, ½” .
16. Allen 8mm and Allen 2.5mm.

MATERIALS

1. Anchors (wall plugs) “UPAT” 13mm diameter
2. Hex-head screws to fit wall plugs 40, 60, 75mm length.
3. Assortment of screws, nuts, washers, spring washers.
4. Electric insulation tape.
5. Super glue, tie wraps (Panduit™).
6. 20 mm fuse SB, 125mA, 160mA, 250mA, 500mA, 1A

ELECTRONIC & GENERAL EQUIPMENT

1. Digital voltmeter (DVM)
2. 2 Walkie Talkies or cellular phones.
3. Binoculars
4. Four STP cables (two cross and two straight) terminated with RJ-45 connectors each end.

OPTICAL EQUIPMENT

(if relevant)

1. Optical Power Meter (Fotec, Noyes, Acterna…) with fiber sockets.
2. 2 sets of multimode (62.5 µm) and Singlemode (15µm) optical fibers with SC terminations.

LAB EQUIPMENT

E1/ETH/ATM/Fast Ethernet BER Test equipment- depending on TS model.

A LIST OF THE TOOLS SUPPLIED BY MRV COMMUNICATIONS WITH EVERY TS4000/5000 HEAD

	Description	**Qty**	**Where to use**
a.	WRENCH #10 FOR M6 SCREW	1	**H:** AD-5000 to TereScope box
b.	WRENCH #13 (M8 SCREW)	1	**E:** JMP-8 - Horizontal Aiming Locking screws
c.	WRENCH # 9/16" (SCREW 3/8")	1	**D:** Locking screws between the alignment device AD-5000 & base plate JMP-8
d.	BALLDRIVER L (WRENCH 5 MM)	1	**J-R, J-L, L:** Vertical aiming locking screws
e.	BALLDRIVER L WRENCH 4 MM	1	**I:** Back door screws
f.	M8 SCREW, WASHER, SPRING, NUT	4	Optional. To mount AD-5000 on standard pedestal
g.	INSTALLATION TOOL CASE	1	Tool case

Wrenches Kit for TS Installation

APPENDIX E TereScopes Bench Test Procedure

Introduction

All TS Products are bench tested indoors prior to outdoor installation to ensure that the system is fully functional.
The bench test is a simple procedure whereby a link pair is aligned on the table and activated to simulate a channel of communication (see fig.1).

2 Points to Remember

1. Since the link distance during the bench test is very short (i.e. the devices activated are very close), the receivers will go into saturation unless the signal is attenuated.
To avert entering saturation, the transmit signal must be physically attenuated.
We recommend the simple procedure of inserting a piece of paper or the like into the beam path, or concealing a portion of the beam with an opaque (non-transparent) material. This will reduce the signal power entering the receiver.
Make sure to attenuate the signal enough so that the receiver's optical power meter value falls below the saturation estimate of the device. See table below for saturation estimate.

2. An additional derivative of the short link distance is the presence of reflections.
The signal will reflect off the front window of the receiver back at the transmitting device and may be mistaken as part of the opposite transmission.
This interference is commonly called "cross talk".
To avoid cross talk during the bench test, it is advisable to check whether interfering reflections exist by shutting off power to one device and verifying that the optical power meter reading in the other (active) device is zero.
This should be repeated for the opposite device.
Alternatively, a practical setup for bench testing the 4" series (models B, C and D) and Light series (models A and C2) is presented in Figure 1; the bench test setup for the 10" series (models E and F) is presented in Figures 2a,2b.
In the 4"/Light setup, a thin physical barrier, such as a piece of cardboard, is used as a wall to divide between the beam paths, thus ensuring that no cross talk occurs.
In the 10" setup, the two devices are not centrally aligned; instead, only one corner of each device faces the opposite device. This allows for testing each transmitter separately. By rotating the devices 45 degrees, the next pair of transmitters is tested. Hence, testing all 8 transmitters in the link pair requires only 4 rotations.

In the 8” setup, the two devices are not centrally aligned; instead, only one corner of each device faces the opposite device. This allows for testing each transmitter separately. By rotating the devices 45 degrees, the next pair of transmitters is tested. Hence, testing all 6 transmitters in the link pair requires only 3 rotations. With opaque masking tape, cover all transmitters that are not under test.

Table 1: Bench Test Information for TS Products

Product name	Opt. Power M. “Sub-Saturation” value	Potential for Interference
TSxxxx	1100	Low
TSxxx/ETH	1200	Med
TSxxx/E1	1200	High
TSxxxx/ST	1200	Med
TS2000/XXX	1100	High
TS4000/XXX	1200	High
TS5000/XXX	1000	High

Figure E.1: Bench Test setup for 4”/Light TS models.

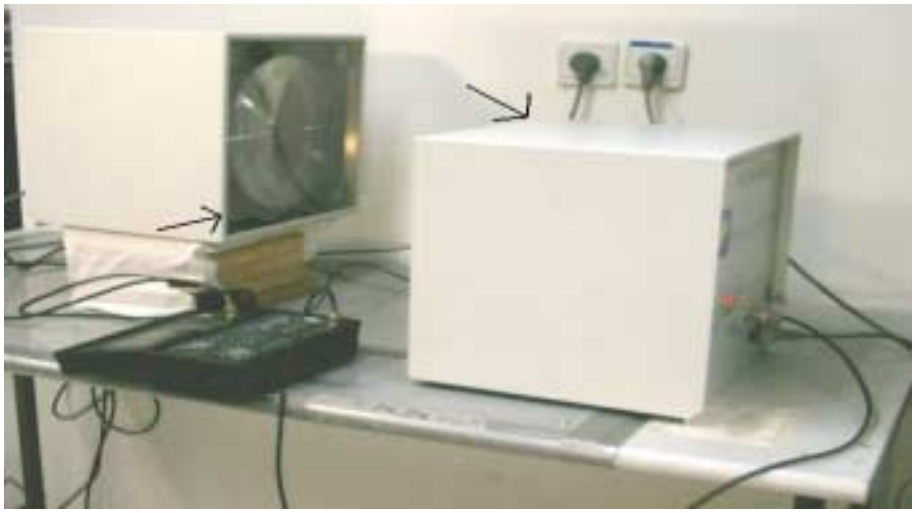

Figure E.2a: Bench Test setup for 10” TS model; transmitter aligned opposite receiver marked with arrows.

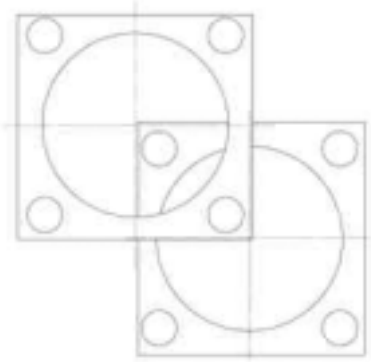

Figure E.2b: Bench Test setup drawing for 10" TS model.
Note that one device is higher than the other and shifted over to the side so that only one transmitter from each device is facing opposite the other device's receiver.

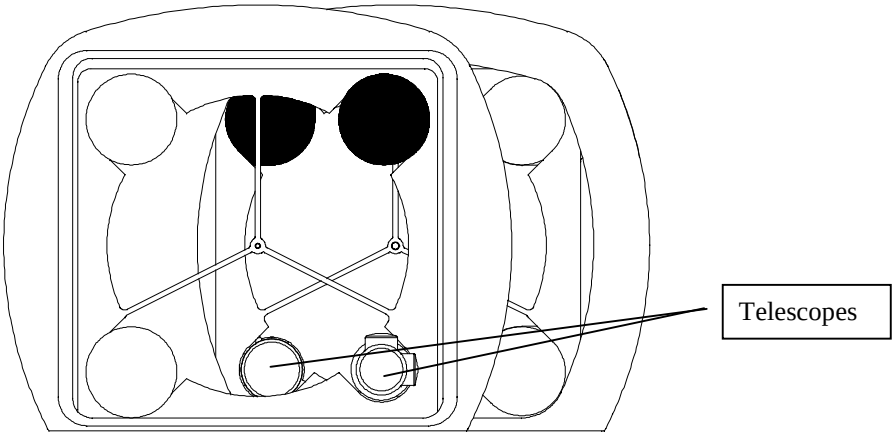

Figure E.3: Active Transmitters (Shown Darkened).

APPENDIX F Effect of Wind on Terescope Devices

Introduction

The outdoor environment in which our devices are normally placed exposes the link to wind pressures that may affect the accuracy of the link's alignment.
Several factors play a role in the determination of the extent to which the directionality of a TS device may be affected by the wind:
Wind speed
Wind direction
Surface area of device perpendicular to wind
Mechanical stability of aiming head – device system.

For example, the mechanical stability is greatest along the side-side axis of the device. Although the surface area along the side of the device is greatest, the resultant wind force – even at very high wind speeds – will barely have an impact on the beam's direction, due to the rigid mechanics along the side-side axis.

Wind Limits for TS Devices

All TS devices have been tested in "worst-case" scenario of the above four factors.
The force necessary to deviate beam was measured from different direction.
From here[1], the minimum wind speed with maximum effect on beam deviation was determined.
The following table lists the minimum wind speeds for different TS products that may cause:
A momentary lapse in the communication.
An extended lapse requiring mechanical repair.

TS Device	Momentary	Extended
• 10" (E&F models)	110 Km/hr	200 Km/hr
• 10" with Windproof-L Accessory	Over 180 Km/hr	Over 250 Km/hr
• 4" (B,C, D models)	150 Km/hr	Over 250 Km/hr
• 4" with Windproof-S	220 Km/hr	Over 300 km/hr
• PhoneLight (A&C2 models)	150 Km/hr	Over 250 Km/hr
• PAL (TS1)	180 Km/hr	Over 250 Km/hr
• 8" (Models D2, E2, G)	200 Km/hr	

[1] We include here the formula for calculating the effective wind force on a flat surface, given a known wind speed:

Wind Force = 0.79 x (Wind Speed)^2 x (Area of Surface)

For instance, assuming a wind speed of 27.78 m/s (equal to 100Km/hr) on a surface area of 0.04m^2 (400cm^2), the force is equal to 24.4 Newtons.

Appendix G FSO Chaining

What is Chaining?

The Chaining of FSO is required when the two sites are connected by more than one link using at least one additional building as a mid-point.

When is the Chaining required?

The Chaining of FSO links is required in the following cases:

a) When there is no direct line of sight between the sites;
b) When the distance between the sites is too long;
c) When the distance between the sites is reachable with one link but the customer wants much more Power Budget for higher reliability.

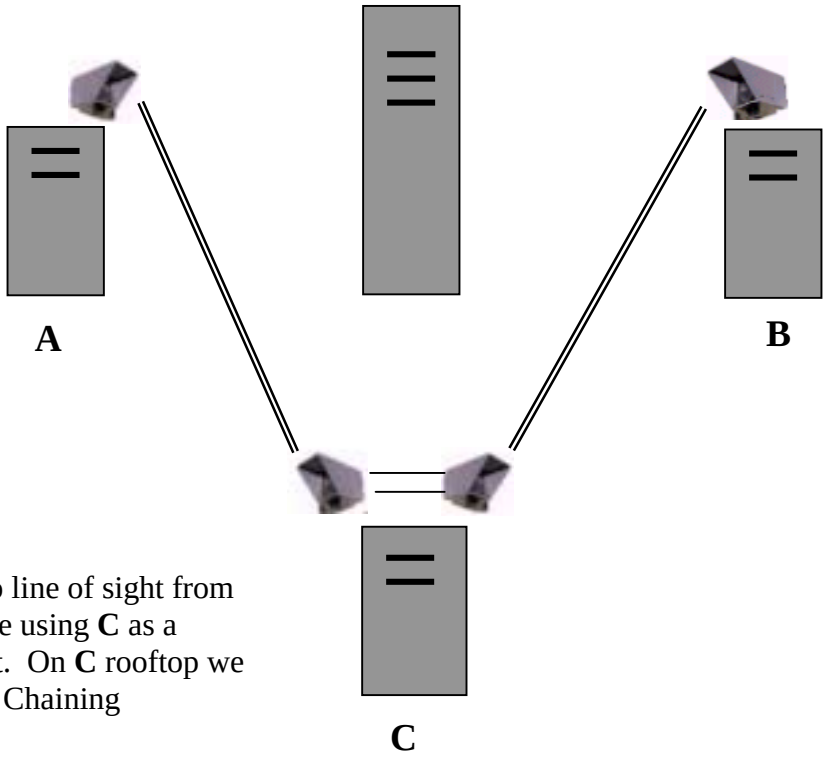

Fig G.1:
As there is no line of sight from **A** to **B**, we are using **C** as a repeater point. On **C** rooftop we used "Direct Chaining connectivity

Indirect Chaining

Indirect Chaining is required for connecting FSO units not including clock recovery circuits. In cases of indirect connectivity, the connection between the two FSO units on the same roof must be done through the Switch or Router or another means of connection that is located inside the building. For example, in Fig. 2, we use the indoor switch in building C for the chaining.

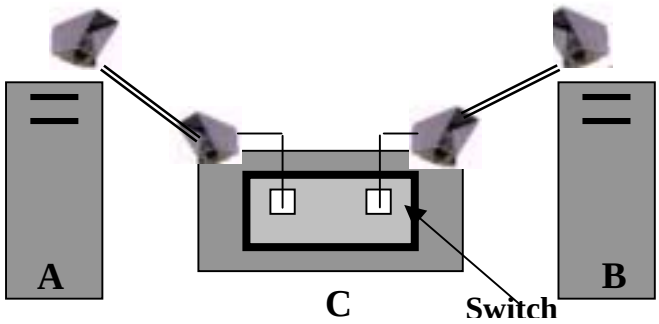

Fig. G.2
Indirect chaining

Direct Chaining

Direct Chaining is the capability to directly connect two FSO units on the same roof (used as repeaters) i.e.. direct crossing between Rx and TX of the two units. For example, in Fig. 3 connection is achieved on rooftop of building **C** <u>without</u> the need to enter the building.

Direct connection is possible for FSO that include clock recovery circuits. The clock recovery regenerates the signal and enables smooth direct chaining.

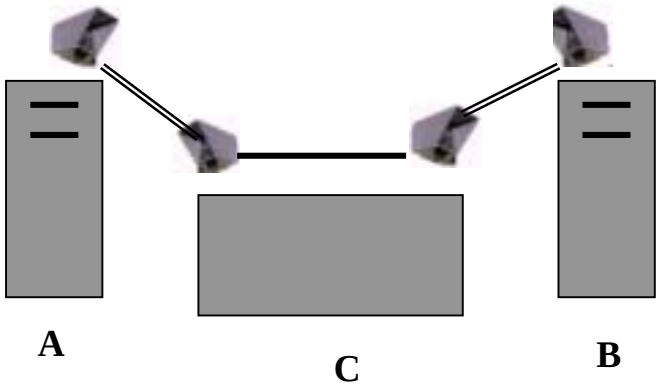

Fig. G.3
Direct chaining

Chaining Limits

The number of links that can be chained is limited due to the Jitter parameter. Sensitivity to jitter is different for every protocol and can vary with different manufacturers. The typical number is 3-4 chained links. If more chains are required, please consult your MRV representative.

FSO products & Chaining

Product series	Chaining	No of chained links
TSG (100-1500 Mbps)	Indirect	3-4
TS155-PS (34-155 Mbps)	Direct	3-4
TS 34 (Open Protocol, 1-34 Mbps)	Indirect	3-4
TS 10 (Ethernet)	Direct	3-4
TS Mux (Mux 4E1, 4T1)	Direct	No Limits*
TS 2 (E1, T1)	Direct	No Limits*

**No Limits – it refers to Networking extentions. If the extentions are of TDM type (E1,E3, STM-1, STM-3), after some chains we might face some "jitter"problems. Therefore, in such cases, chaining should be considered on a case by case basis.*

APPENDIX H Installation Log

D.1. Client / Dealer details

	Customer	Dealer
Company Name		
Address City Country		
Contact Person		
Tel		
Fax		
e-mail		

D.2. Application details

Type of network	☐ E1 , ☐ Ethernet , ☐ Token Ring , ☐ Fast Ethernet , ☐ FDDI , ☐ ATM , ☐ Other (Specify)
Product	
Evaluated distance by customer	
Address of installation (site A)	
Address of installation (site B)	

D.3. Sketch of the area

D.4. Site survey

Done by	
Customer representative	
Distance	
Date	

	Site A	Site B
Location		
Floor		
Orientation (NSEW)		
Installation site scheme		
Indoor / Outdoor		
Plate JMP / Bracket JMB		
Window attenuation		
On-line UPS		
Voltage required (110V / 230V)		
Ground earthing		
Radio antenna field		

Associated interface equipment	Site A	Site B
Manufacturer		
Type		
Model number		
Interface type		

D.5. Installation

Done by	
Customer representative	
Date	

	Site A	Site B
System model		
Serial number		
Location: Same as site survey, if not provide details		
Accessories : Same as site survey, if not provide details		
Digital readout		
Telescope calibration : if cannot , sketch the telescope view		

BER test	
BER equipment type	
Loopback location	
Error type (random, burst)	
Brief interruption test	

D.6. System failure

Visit made by	
Customer representative	
Date	

	Site A	Site B
Sketch of telescope view		
Digital readout		
Failure detail		
Action items		

Visit made by	
Customer representative	
Date	

	Site A	Site B
Sketch of telescope view		
Digital readout		
Failure detail		
Action items		

APPENDIX I

Power Supply Replacement

General

The PS-X000-PR-XX power supply is used in the TS5000 and in TS4000 series. It is pluggable and may be DC (24 to 60 Vdc, or 35-60Vdc for TS5000 series) or AC (100-240 Vac). The power supply can be simply hot swapped within seconds without the need for performing any other changes to the TereScope.

Procedure

The procedure for replacing the power supply in the TS5000 is as follows:

1. Turn off the power to the TS5000.
2. Remove the back door by undoing the four (4) allen screws.
3. Remove the power supply cover by undoing the single screw.
4. Disconnect the three (3) wires of the power cable by undoing the three (3) screws.
5. Undo the two 'N' screws (shown in Figure I.1) and carefully pull out the power supply as shown in Figure I.2.
6. Disconnect the flat cable from the power supply as shown in Figure I.3.
7. Connect the flat cable to the new power supply.
8. Fasten the new power supply with the two 'N' screws.
9. Connect the three (3) wires of the power cable with the three (3) screws.
10. Fasten the power supply cover with the single screw.
11. Fasten the power supply back door with the four (4) allen screws.
12. Turn on the power to the TS5000.Power.

Figure I.1: Undoing an 'N' Screw

Figure I.2: Pulled out Power Supply

Figure I.3: Disconnected Flat Cable

APPENDIX J

TS5000/155 and TS4000/155 enhancements

Constantly striving for excellence and customer satisfaction, as befits the world leader in the FSO, MRV is presently enhancing its TS4000/155 (p/n TS155/E2/XYZ/V*) and the TS5000/155 (TS155/G/XYZ/V*) TereScope systems to make the operation of these devices easier. For example, from now on if a customer does not ordered a Fusion option and afterwards changed his mind, he will not have to return the TereScope to the factory, he will be able to quickly and easily replace the interface by himself. Also, an optional additional power supply can double the MTBF of these products.

The improvements consist of:

1 – Redundant power supply : it is possible to order an additional power supply for the TS head. In this case if the main power supply fails, the redundant will continue the job without cutting the link.

2 – The interface is removable: the distributor or the client can change the interface without sending the unit to MRV. (good for changing from MM to SM or to add the FUSION soltion…)

3 – Laser enable indicators: While it is a new feature for the TS4000/155, TS5000/155 always had it - just the indicators' location on the back panel and their size were changed.

4 – SNMP management: a new SNMP card is integrated, the features are:

a - Two new functions :

- Local Loop back
- Remote Loop Back

b - Active Management (not only monitoring):

- Local Loop back
- Remote Loop Back
- Reset
- Fusion
- Add Power supplies status
- Software or hardware mode

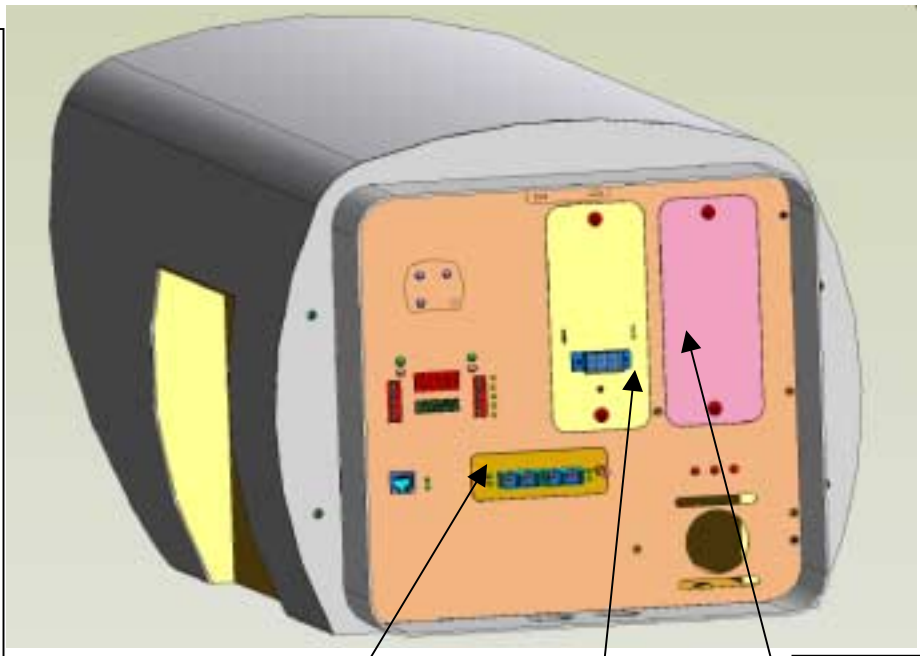

Removable Interface

Main removable Power supply

Redundant removable Power supply (Optional)

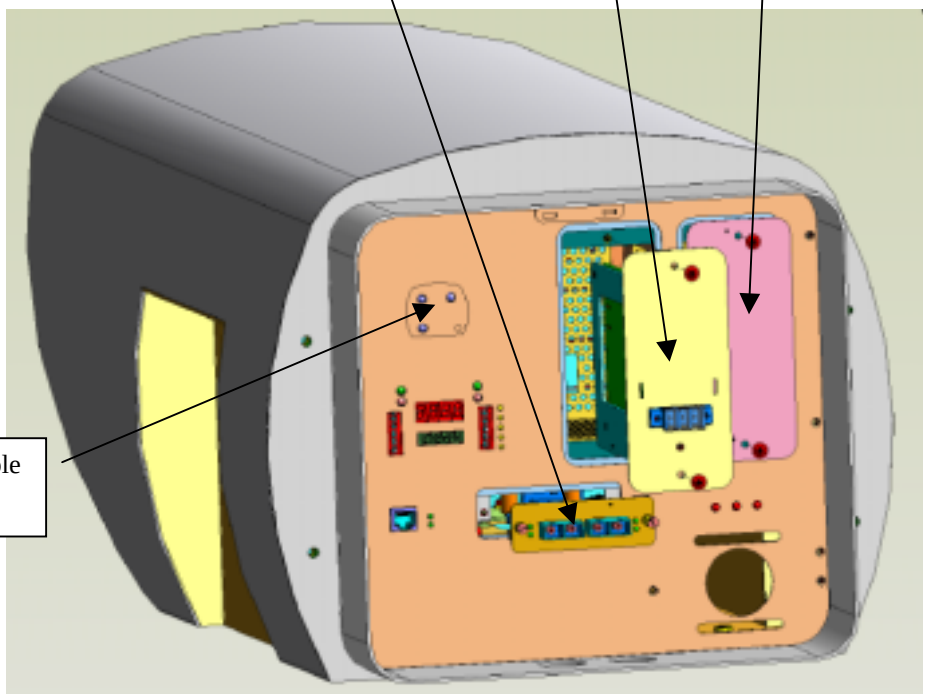

Lasers Enable indicators